REPUBLIC OF KENYA

Ministry of Water Sanitation and Irrigation

Project Name: Improvement of Drinking Water and Sanitation Systems in Mombasa – Mwache Project

Credit No.: CKE 1103

Volume 3 of 3 **Bidding Documents: Drawings**

- Drawings

Contract Name: **Emergency Works for Increasing Water Availability in Likoni**

IFB No.: **CWSB/AFD/W1/2019-2020**

Employer: **Coast Water Works Development Agency**

P.O. Box 90417, 80100 Mombasa, Kenya

Funding: AFD

Issued on: **19 January 2021**

Section VII. - Drawings

DRAWING INDEX

	SHEET NO.	DRAWING No.	DRAWING TITLE
A			**Tiwi Wellfield**
	1	1210/K/001/A	Overview Map of Northern Tiwi Wellfield
	2	1210/K/002/A	Overview Map of Southern Tiwi Wellfield
	3	1210/K/003/A	Typical Borehole Design
	4	1210/K/004/A	Pipework Details on Borehole Sites
	5	1210/K/005/A	Borehole Site - Typical Well Gantry
	6	1210/K/006/A	Borehole A to Kaya Bombo Main - Plan and Longitudinal Profile (CH 0+00-CH 0+792)
	7	1210/K/007/A	Borehole 4/7 to Kaya Bombo Main - Plan and Longitudinal Profile (CH 0+000-CH 0+871)
	8	1210/K/008/A	Kaya Bombo Reservoir - General Layout
	9	1210/K/009/A	Kaya Bombo Reservoir - Proposed Rehabilitation Details
	10	1210/K/010/A	Kaya Bombo and Magodzoni Reservoirs - Chlorination Building - Plans and Sections A-A
	11	1210/K/011A	Kaya Bombo and Magodzoni Reservoirs - Chlorination Building - Section B-B and Mixing Tank Detail
	12	1210/K/012/A	Kaya Bombo and Magodzoni Reservoirs - Chlorination Building - Electrical Layout
	13	1210/K/013A	Kaya Bombo and Magodzoni Reservoirs - Chlorination Building - Right View & Left View
	14	1210/K/014A	Kaya Bombo and Magodzoni Reservoirs - Chlorination Building - Front View and Back View
	15	1210/K/015/A	Geophysical Investigations - Proposed Area
	16	1210/K/016/A	Tiwi Monitoring System- Sheet 1 of 2
	17	1210/K/017/A	Tiwi Monitoring System- Sheet 2 of 2
B			**MARERE PARALLEL PIPELINE SYSTEM**
	18	1220/K/001A	Schematic Layout of Marere Pipeline
	19	1220/K/002A	Marere Headworks - Flow Division Structure
	20	1220/K/003A	Plan and Longitunal Profile- Sheet 1/6- CH0+000-1+200
	21	1220/K/004A	Plan and Longitunal Profile- Sheet 2/6- CH1+200-2+400
	22	1220/K/005A	Plan and Longitunal Profile- Sheet 3/6- CH2+400-3+600
	23	1220/K/006A	Plan and Longitunal Profile- Sheet 4/6- CH3+600-4+800
	24	1220/K/007A	Plan and Longitunal Profile- Sheet 5/6- CH 4+800-CH 6+000
	25	1220/K/008A	Plan and Longitunal Profile- Sheet 6/6- CH 6+000-CH6+382
	26	1220/K/009A	Pemba River / Creek Undercrossing - Plan and Profile
	27	1220/K/010A	Madabarra and Kibaoni Junction Details
	28	1220/K/011A	Geotechnical Trial Holes
C			**STANDARD DRAWINGS AND MINOR WORKS**
	29	1230/K/003A	Air Valves Chamber Details
	30	1230/K/005A	Gate Valve Chamber Details
	31	1230/K/007A	Washout Valve Chmaber Details- Type 1
	32	1230/K/008A	Washout Valve Chamber Details- Type 2
	33	1230/K/009A	Thrust Block Details- Sheet 1 of 2
	34	1230/K/010A	Thrust Block Details- Sheet 2 of 2
	35	1230/K/011A	Pipe Bedding Details
	36	1230/K/013A	Project Publicity Board - CWWDA
	37	1230/K/014A	Pipeline Marker Posts Details
	38	1230/K/015A	Fencing and Gate Details- Sheet 1 of 2
	39	1230/K/016A	Fencing and Gate Details- Sheet 2 of 2
	40	1230/K/017A	Ventilated Improved Pit Latrine (VIP)

EMERGENCY WORKS FOR INCREASE OF WATER AVAILABILITY IN LIKONI

SHORT TERM TECHNICAL ASSISTANCE
MWACHE PROJECT

Client/Employer:

THE CHIEF EXECUTIVE OFFICER
COAST WATER WORKS DEVELOPMENT AGENCY
P.O BOX 90417, 80100, MOMBASA. KENYA

Consulting Engineer:

GKW CONSULT GMBH
Augustaanlage 67 - DE-68165
Mannheim
GERMANY
E-MAIL: info@gkw-consult.com
Tel : +49 621 41077-342
Fax : +49 621 41077-302

Subconsultant:

INTEGRATED SCIENCE AND
ENGINEERING PROJECTS LTD.
P.O. BOX 3271- 00200 NAIROBI, KENYA
E-MAIL: isep.ltd@gmail.com
Tel : +254-722306748

Revisions:		
REV.	DATE	REMARKS

Note:
Position of Boreholes, Pipelines and Reservoirs are Indicative.

SURVEYED BY:
DESIGNED BY: C.O.
DRAWN BY: B.H.
CHECKED BY: C.O.
APPROVED BY: J.B.

SCALE:
Not to scale

Drawing Title:

Tiwi Wellfield

Overview Map of Nothern Tiwi Wellfield

Date:	Drg. No.	Sheet
08/2019	1210/K/001A	1

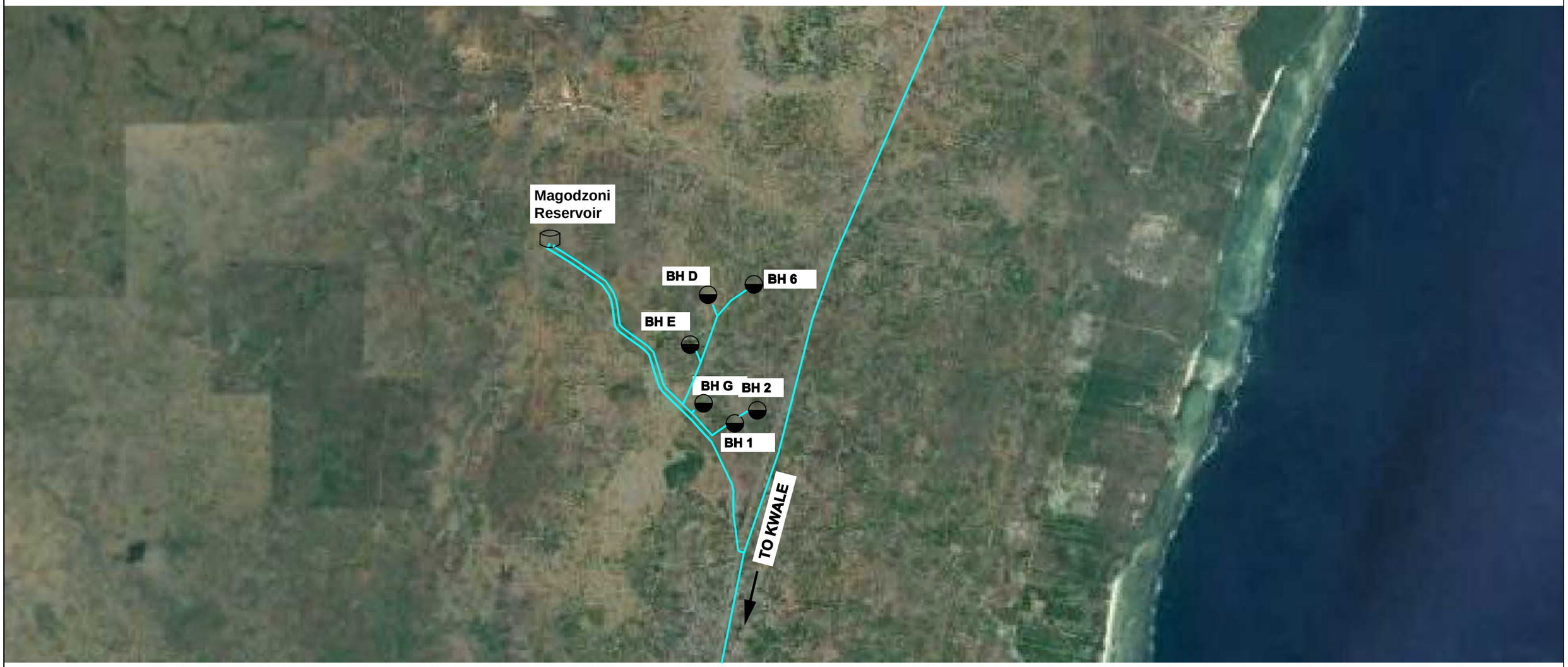

EMERGENCY WORKS FOR INCREASE OF WATER AVAILABILITY IN LIKONI

SHORT TERM TECHNICAL ASSISTANCE
MWACHE PROJECT

Client/Employer:

THE CHIEF EXECUTIVE OFFICER
COAST WATER WORKS DEVELOPMENT AGENCY
P.O BOX 90417, 80100, MOMBASA. KENYA

Consulting Engineer:

GKW CONSULT GMBH
Augustaanlage 67 - DE-68165
Mannheim
GERMANY
E-MAIL: info@gkw-consult.com
Tel : +49 621 41077-342
Fax : +49 621 41077-302

Subconsultant:

INTEGRATED SCIENCE AND
ENGINEERING PROJECTS LTD.
P.O. BOX 3271- 00200 NAIROBI, KENYA
E-MAIL: isep.ltd@gmail.com
Tel : +254-722306748

Revisions:		
REV.	DATE	REMARKS

Note:
Position of Boreholes, Pipelines and Reservoirs are indicative.

SURVEYED BY:
DESIGNED BY: C.O.
DRAWN BY: B.H.
CHECKED BY: C.O.
APPROVED BY: J.B.

SCALE:
Not to scale

Drawing Title:

Tiwi Wellfield

Overview Map of Southern Tiwi Wellfield

Date:	Drg. No.	Sheet
08/2019	1210/K/002A	2

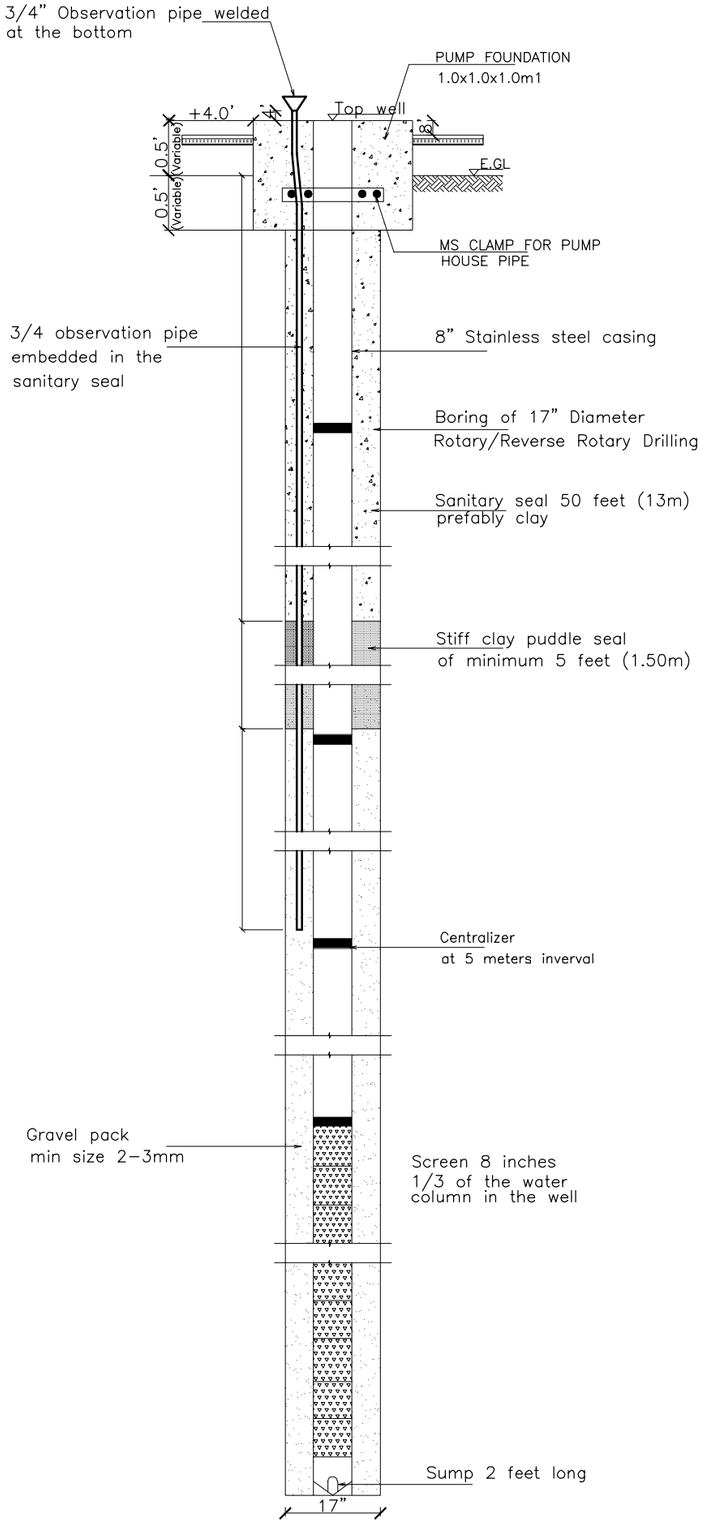

TUBEWELL DETAIL

Note:
All dimensions in this drawing are indicative. The Contractor has to verify all information on this drawing before starting the works. All updated drawings are to be approved by the Engineer. Regarding the underground infrastructure, the Contractor has the full responsibility to get all necessary information and permissions from the concerning company.

Client/Employer:
COAST WATER WORKS DEVELOPMENT AGENCY
P.O BOX 90417, 80100, MOMBASA. KENYA

Consulting Engineer:
GKW Consult GmbH
Augustaanlage 67
68165 Mannheim
GERMANY

Subconsultant:
ISEP
Heri Paradise, Suite 8C
Dennis Pritt Road
P.O. BOX 3271,
00200 - GPO, NAIROBI, KENYA

Revisions:

REV.	DATE	REMARKS

SURVEYED BY:
DESIGNED BY: C.O.
DRAWN BY: F.V.
CHECKED BY: C.O
APPROVED BY: J.B.
SCALES: AS SHOWN
A3

Drawing Title:
TIWI WELLFIELD
TYPICAL BOREHOLE DESIGN

Date: 08/2019
Drg. No. **P.721771/H/1210/K/003/A**
Sheet 3

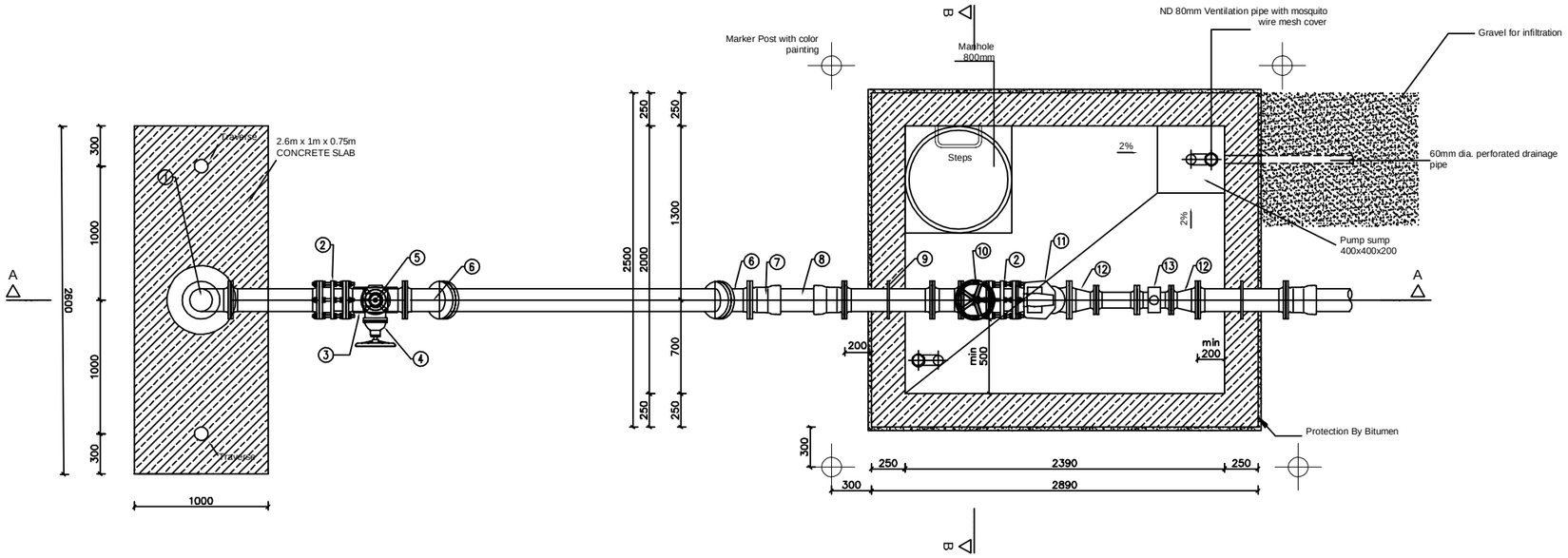

PLAN

For Section B-B refer to drawing No. 1230/K/005/A

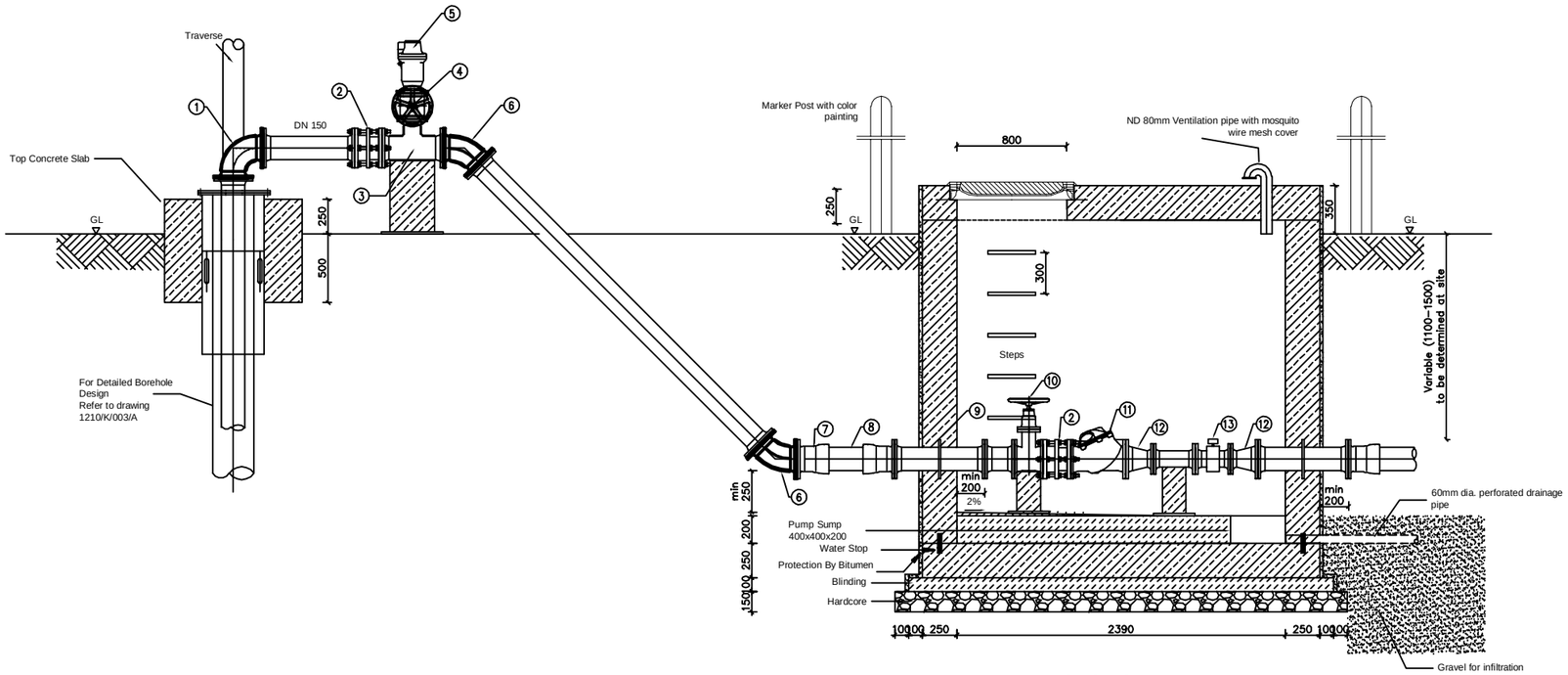

SECTION A-A

NOTES

1. All dimensions are in millimeters unless otherwise stated
2. Only figured dimensions to be taken from this drawing
3. All reinforced concrete to grade C25
4. All blinding concrete to garde C15
5. Exact location to be approved by the Engineer
6. All dimensions in this drawing are indicative. The Contractor has to verify all information on this drawing before starting the works. All updated drawings are to be approved by the Engineer. Regarding the underground infrastructure, the Contractor has the full responsibility to get all necessary information and permissions from the concerning company.

LEGEND

- Reinforced Concrete
- Mass Concrete
- Hardcore
- Gravel

1. Double flanged 90 deg. bend
2. Dismantling piece
3. DN 150/80 double flanged tee
4. DN80 gate valve
5. DN 80 air valve
6. Double flanged 45 deg. bend
7. EU piece
8. Pipe coupling. L=500mm
9. F-piece with puddle flange
10. DN150 gate valve
11. DN150 check valve
12. DN 150/100 reducer
13. DN 100 Flow Meter

EMERGENCY WORKS FOR INCREASE OF WATER AVAILABILITY IN LIKONI

SHORT TERM TECHNICAL ASSISTANCE
MWACHE PROJECT

Client/Employer:
COAST WATER WORKS DEVELOPMENT AGENCY
P.O BOX 90417, 80100, MOMBASA. KENYA

Consulting Engineer:
GKW Consult GmbH
Augustaanlage 67
68165 Mannheim
GERMANY

Subconsultant:
ISEP
Heri Paradise, Suite 8C
Dennis Pritt Road
P.O. BOX 3271,
00200 - GPO, NAIROBI, KENYA

Revisions:

REV.	DATE	REMARKS

SURVEYED BY:
DESIGNED BY: C.O.
DRAWN BY: L.F.F.
CHECKED BY: C.O
APPROVED BY: J.B.
SCALES: AS SHOWN
A3

Drawing Title:
Tiwi Wellfield
Pipework Details on Borehole Sites

Date: 08/2019
Drg. No. P.721771/H/1210/K/004/A
Sheet 4

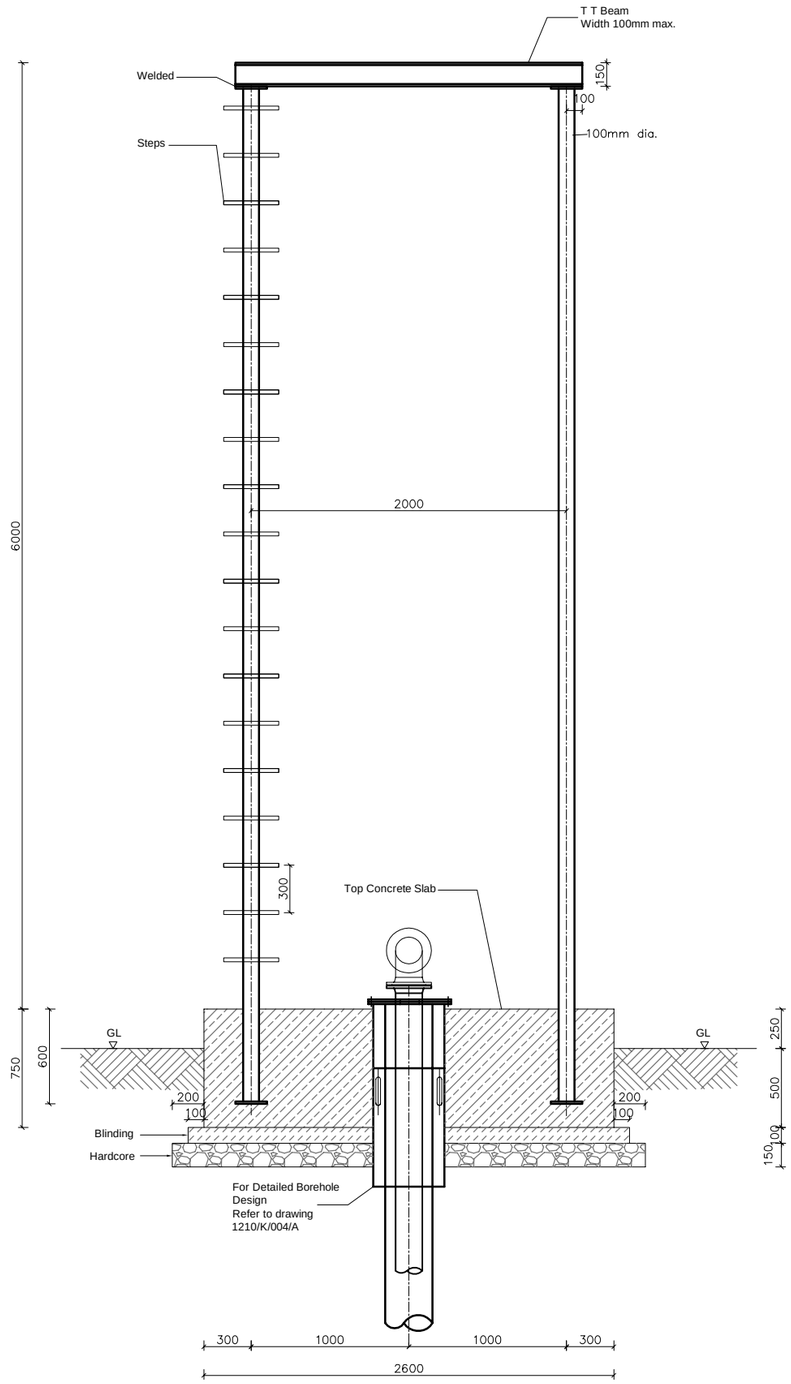

NOTES

1. All dimensions are in millimeters unless otherwise stated
2. Only figured dimensions to be taken from this drawing
3. All reinforced concrete to grade C25
4. All blinding concrete to grade C15
5. Exact location to be approved by the Engineer
6. All dimensions in this drawing are indicative. The Contractor has to verify all information on this drawing before starting works. All updated drawings are to be approved by the Engineer. Regarding the underground infrastructure, the Contractor has the full responsibility to get all necessary information and permissions from the concerning company.

LEGEND

- Reinforced Concrete
- Mass Concrete
- Hardcore
- Gravel

EMERGENCY WORKS FOR INCREASE OF WATER AVAILABILITY IN LIKONI

SHORT TERM TECHNICAL ASSISTANCE
MWACHE PROJECT

Client/Employer:
COAST WATER WORKS DEVELOPMENT AGENCY
P.O BOX 90417, 80100, MOMBASA. KENYA

Consulting Engineer:
GKW Consult GmbH
Augustaanlage 67
68165 Mannheim
GERMANY

Subconsultant:
ISEP
Heri Paradise, Suite 8C
Dennis Pritt Road
P.O. BOX 3271,
00200 - GPO, NAIROBI, KENYA

Revisions:

REV.	DATE	REMARKS

SURVEYED BY:
DESIGNED BY: C.O.
DRAWN BY: L.F.F.
CHECKED BY: C.O
APPROVED BY: J.B.

SCALE: Not to scale

Drawing Title:
Tiwi Wellfield
BOREHOLE SITE - TYPICAL WELL GANTRY

Date: 08/2019
Drg. No. **P.721771/H/1210/K/005/A**
Sheet 5

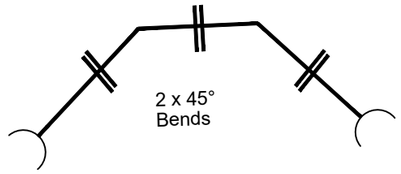

JUNCTION DETAIL

To verify on site

NOTES:

TO BE READ IN CONJUNCTION WITH
a) DRAWING No. 1210/K/003/A
b) DRAWING No. 1210/K/004/A

All the elevations and dimensions in this drawing are indicative. The Contractor has to verified all information on this drawing before starting the works. All update drawings are to be approved by the Engineer.
Regarding the underground infrastructure, the Contractor has the full responsibility to get all necessary information and permissions from the concerning company.

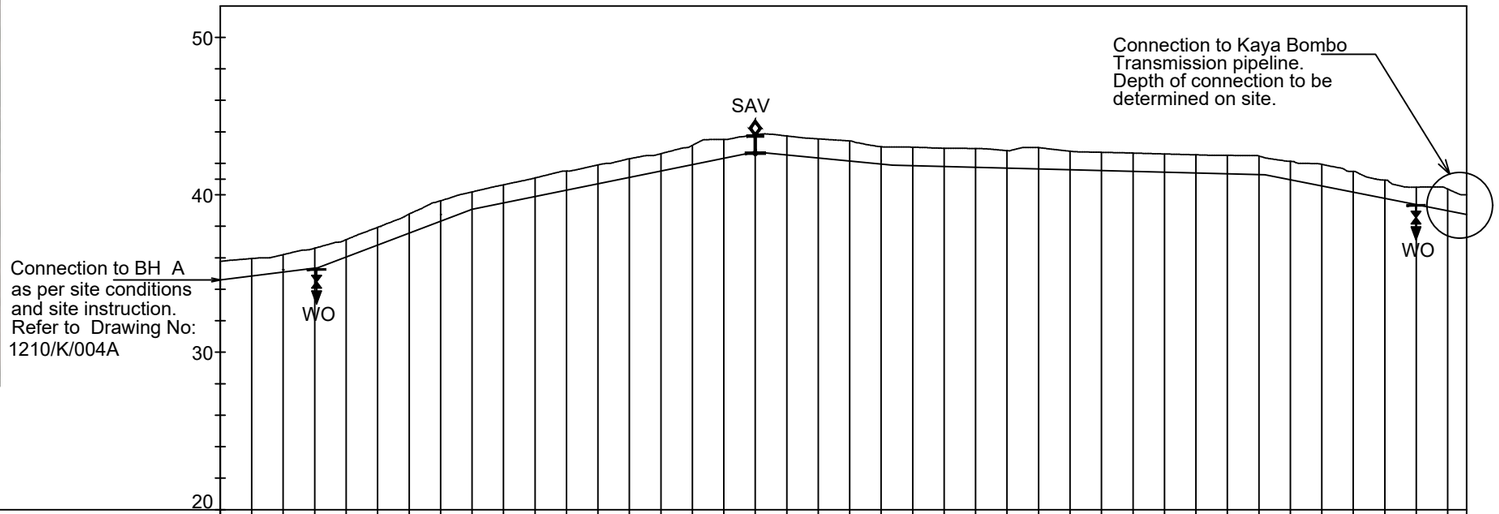

CHAINAGE	0+000	0+020	0+040	0+060	0+080	0+100	0+120	0+140	0+160	0+180	0+200	0+220	0+240	0+260	0+280	0+300	0+320	0+340	0+360	0+380	0+400	0+420	0+440	0+460	0+480	0+500	0+520	0+540	0+560	0+580	0+600	0+620	0+640	0+660	0+680	0+700	0+720	0+740	0+760	0+780	0+792
GROUND LEVEL	35.77	35.95	36.20	36.61	37.15	37.93	38.78	39.62	40.18	40.64	41.07	41.51	41.90	42.29	42.61	43.14	43.51	43.82	43.74	43.55	43.42	43.05	43.03	42.96	42.94	42.81	43.00	42.77	42.70	42.65	42.60	42.54	42.50	42.47	42.12	41.94	41.48	40.93	40.48	40.36	40.00
PIPE COVER LEVEL (m)	34.60	34.85	35.10	35.35	36.05	36.81	37.57	38.33	39.08	39.50	39.90	40.30	40.71	41.11	41.51	41.92	42.32	42.72	42.54	42.34	42.15	41.95	41.85	41.80	41.75	41.70	41.65	41.60	41.54	41.49	41.44	41.39	41.33	41.29	40.95	40.57	40.17	39.77	39.38	39.62	39.12
MINIMUM PIPE COVER (m)	1.17	1.10	1.10	1.26	1.10	1.12	1.21	1.29	1.10	1.14	1.17	1.21	1.19	1.18	1.10	1.22	1.19	1.10	1.20	1.21	1.27	1.10	1.18	1.16	1.19	1.11	1.35	1.17	1.16	1.16	1.16	1.15	1.17	1.18	1.17	1.37	1.31	1.16	1.10	1.37	1.24
PIPE DETAILS	DN 150 HDPE PIPE PN 12																																								
SPECIAL DETAILS																	2x45° HB					11½° HB												11+22° HB							

EMERGENCY WORKS FOR INCREASE OF WATER AVAILABILITY IN LIKONI

SHORT TERM TECHNICAL ASSISTANCE
MWACHE PROJECT

Client/Employer:
COAST WATER WORKS DEVELOPMENT AGENCY
P.O BOX 90417, 80100, MOMBASA. KENYA

Consulting Engineer:
GKW Consult GmbH
Augustaanlage 67
68165 Mannheim
GERMANY

Subconsultant:
ISEP
Heri Paradise, Suite 8C
Dennis Pritt Road
P.O. BOX 3271,
00200 - GPO, NAIROBI, KENYA

Revisions:

REV.	DATE	REMARKS

SURVEYED BY:
DESIGNED BY: C.O.
DRAWN BY: F.V.
CHECKED BY: C.O
APPROVED BY: J.B.

SCALES:
Not to scale

Drawing Title:

TIWI WELLFIELD

BOREHOLE A TO KAYA BOMBO MAIN

PLAN AND LONGITUDINAL PROFILE (cha 0+000 TO cha 0+792)

Date: 09/2019

Drg. No. **1210/K/006/A**

Sheet 6

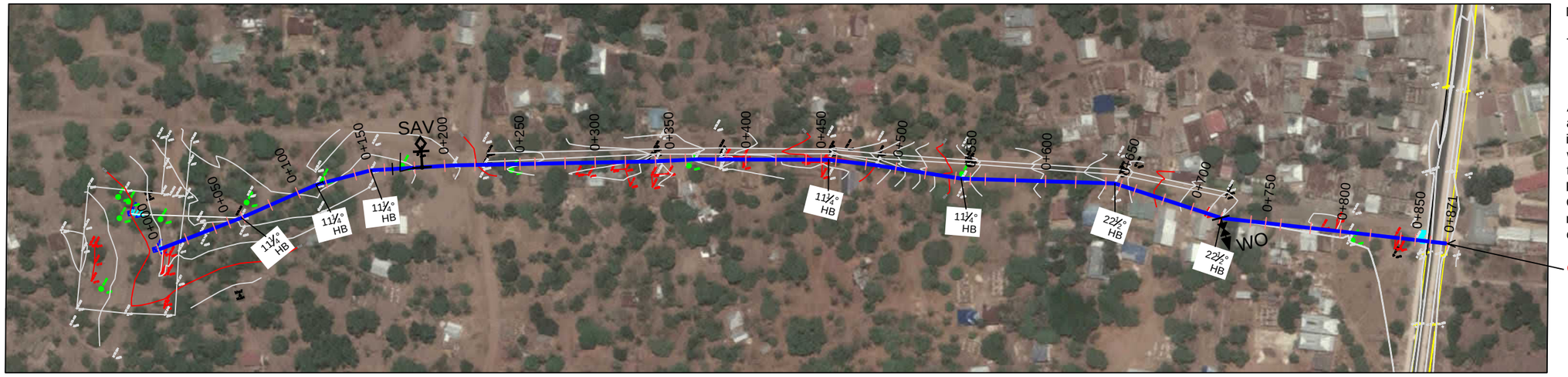

NOTES:

TO BE READ IN CONJUNCTION WITH
a) DRAWING No. 1210/K/003/A
b) DRAWING No. 1210/K/004/A

All the elevations and dimensions in this drawing are indicative. The Contractor has to verified all information on this drawing before starting the works. All update drawings are to be approved by the Engineer.
Regarding the underground infrastructure, the Contractor has the full responsibility to get all necessary information and permissions from the concerning company.

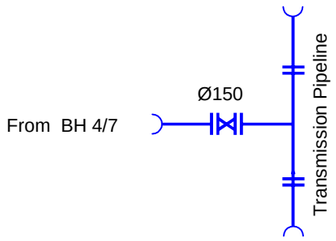

DETAIL 1
To verify on site

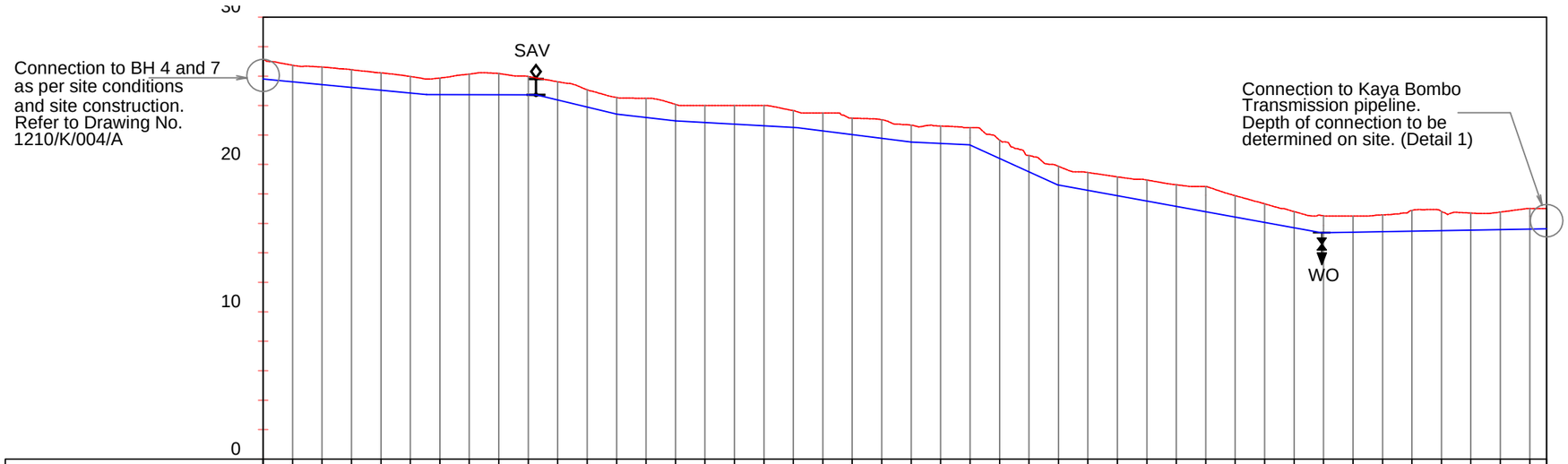

CHAINAGE	0+000	0+020	0+040	0+060	0+080	0+100	0+120	0+140	0+160	0+180	0+200	0+220	0+240	0+260	0+280	0+300	0+320	0+340	0+360	0+380	0+400	0+420	0+440	0+460	0+480	0+500	0+520	0+540	0+560	0+580	0+600	0+620	0+640	0+660	0+680	0+700	0+720	0+740	0+760	0+780	0+800	0+820	0+840	0+860	0+871
GROUND LEVEL	27.15	26.74	26.61	26.43	26.22	25.97	25.87	26.13	26.18	25.98	25.62	25.07	24.54	24.50	24.08	24.00	24.00	24.00	23.66	23.50	23.15	23.04	22.66	22.61	22.50	21.66	20.60	19.87	19.45	19.16	18.95	18.62	18.50	17.88	17.33	16.80	16.52	16.50	16.58	16.87	16.81	16.70	16.77	17.00	17.00
PIPE COVER LEVEL (m)	25.81	25.63	25.43	25.23	25.05	24.85	24.75	24.74	24.74	24.73	24.38	23.90	23.42	23.20	22.96	22.85	22.74	22.63	22.53	22.29	22.04	21.78	21.53	21.43	21.32	20.41	19.50	18.61	18.25	17.89	17.53	17.16	16.80	16.43	16.07	15.70	15.37	15.40	15.44	15.47	15.51	15.52	15.59	15.62	15.65
MINIMUM PIPE COVER(m)	1.34	1.11	1.18	1.20	1.17	1.12	1.12	1.39	1.44	1.25	1.24	1.17	1.12	1.30	1.12	1.15	1.26	1.37	1.13	1.21	1.11	1.26	1.13	1.18	1.18	1.25	1.10	1.26	1.20	1.27	1.42	1.46	1.70	1.45	1.26	1.10	1.15	1.10	1.14	1.40	1.30	1.15	1.18	1.38	1.35
PIPE DETAILS		DN 150 HDPE PIPE PN 12																																											
SPECIAL DETAILS				11¼° HB			11¼° HB		11¼° HB														11¼° HB				11¼° HB							22½° HB				22½° HB							

EMERGENCY WORKS FOR INCREASE OF WATER AVAILABILITY IN LIKONI

SHORT TERM TECHNICAL ASSISTANCE
MWACHE PROJECT

Client/Employer:
COAST WATER WORKS DEVELOPMENT AGENCY
P.O BOX 90417, 80100, MOMBASA. KENYA

Consulting Engineer:
GKW Consult GmbH
Augustaanlage 67
68165 Mannheim
GERMANY

Subconsultant:
ISEP
Heri Paradise, Suite 8C
Dennis Pritt Road
P.O. BOX 3271,
00200 - GPO, NAIROBI, KENYA

Revisions:

REV.	DATE	REMARKS

SURVEYED BY:
DESIGNED BY: C.O.
DRAWN BY: F.V.
CHECKED BY: C.O
APPROVED BY: J.B.

SCALES:
Not to scale

Drawing Title:

TIWI WELLFIELD

BOREHOLE 4/7 TO KAYA BOMBO MAIN
PLAN AND LONGITUDINAL PROFILE (cha 0+000 TO cha 0+871)

Date: 09/2019
Drg. No. /1210/K/007/A
Sheet 7

Note:
All informations in this drawing are indicative. The Contractor has to verify all information on this drawing before starting the works. All updated drawings are to be approved by the Engineer. Regarding the underground infrastructure, the Contractor has the full responsibility to get all necessary information and permissions from the concerning company.

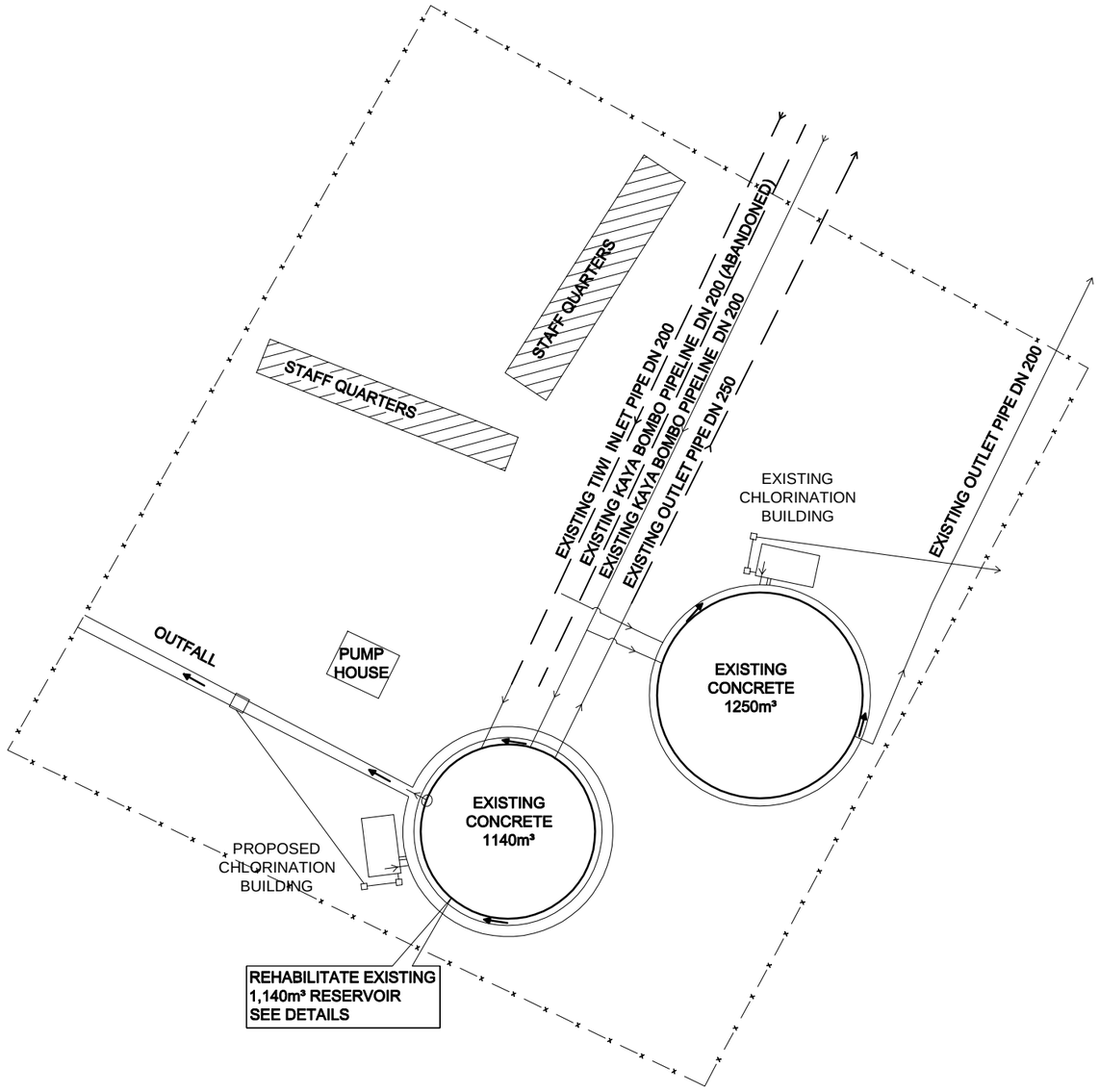

KAYA BOMBO TANKS SITE
PROPOSED WORKS
SKETCH WITHOUT SCALE

EMERGENCY WORKS FOR INCREASE OF WATER AVAILABILITY IN LIKONI

SHORT TERM TECHNICAL ASSISTANCE
MWACHE PROJECT

Client/Employer:
COAST WATER WORKS DEVELOPMENT AGENCY
P.O BOX 90417, 80100, MOMBASA. KENYA

Consulting Engineer:
GKW Consult GmbH
Augustaanlage 67
68165 Mannheim
GERMANY

Subconsultant:
ISEP
Heri Paradise, Suite 8C
Dennis Pritt Road
P.O. BOX 3271,
00200 - GPO, NAIROBI, KENYA

Revisions:

REV.	DATE	REMARKS

SURVEYED BY:
DESIGNED BY: C.O.
DRAWN BY: B.H.
CHECKED BY: C.O
APPROVED BY: J.B.

SCALE: Not to scale

Drawing Title:
Tiwi Wellfield
KAYA BOMBO RESERVOIR GENERAL LAYOUT

Date: 08/2019
Drg. No. **P.721771/H/1210/K/008/A**
Sheet 8

Note:
All dimensions in this drawing are indicative. The Contractor has to verify all information on this drawing before starting the works. All updated drawings are to be approved by the Engineer. Regarding the underground infrastructure, the Contractor has the full responsibility to get all necessary information and permissions from the concerning company.

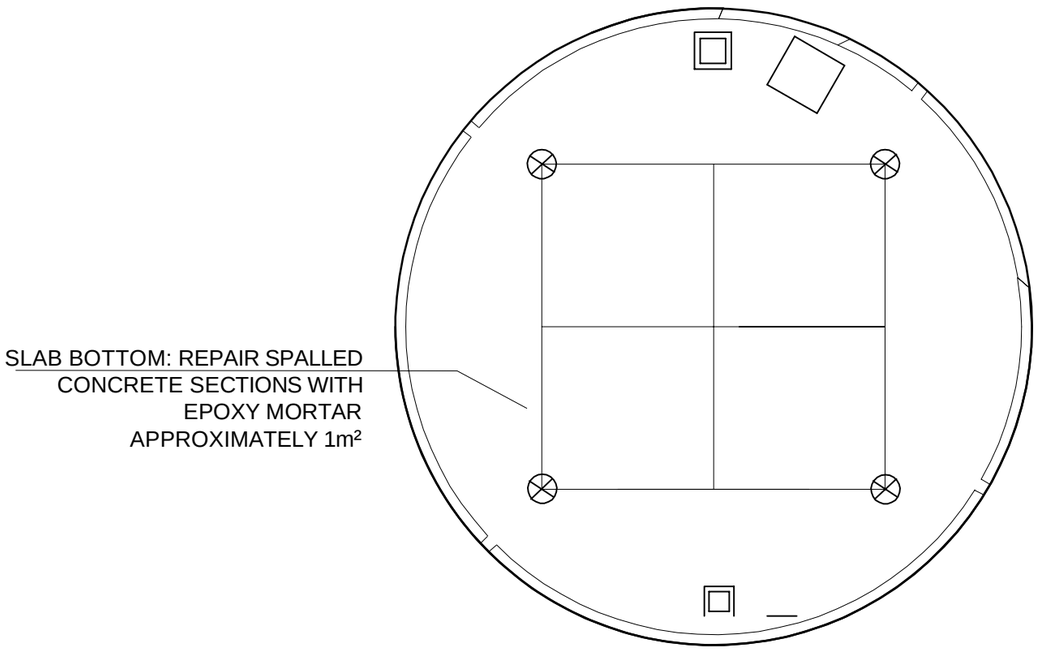

SLAB DETAIL

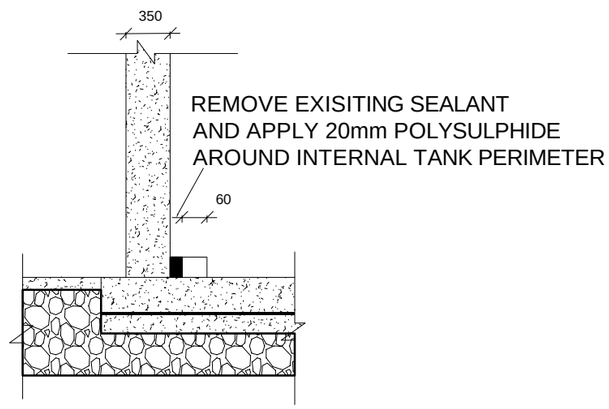

RESERVOIR FLOOR/WALL DETAIL

EMERGENCY WORKS FOR INCREASE OF WATER AVAILABILITY IN LIKONI

SHORT TERM TECHNICAL ASSISTANCE
MWACHE PROJECT

Client/Employer:
COAST WATER WORKS DEVELOPMENT AGENCY
P.O BOX 90417, 80100, MOMBASA. KENYA

Consulting Engineer:
GKW Consult GmbH
Augustaanlage 67
68165 Mannheim
GERMANY

Subconsultant:
ISEP
Heri Paradise, Suite 8C
Dennis Pritt Road
P.O. BOX 3271,
00200 - GPO, NAIROBI, KENYA

Revisions:		
REV.	DATE	REMARKS

SURVEYED BY:
DESIGNED BY: C.O
DRAWN BY: J.K.
CHECKED BY: C.O
APPROVED BY: J.B.

SCALE: Not to scale

Drawing Title:
TIWI WELLFIELD
KAYA BOMBO RESERVOIRS
PROPOSED REHABILITATION DETAILS

Date:	Drg. No.	Sheet
07/2019	1210/K/009/A	9

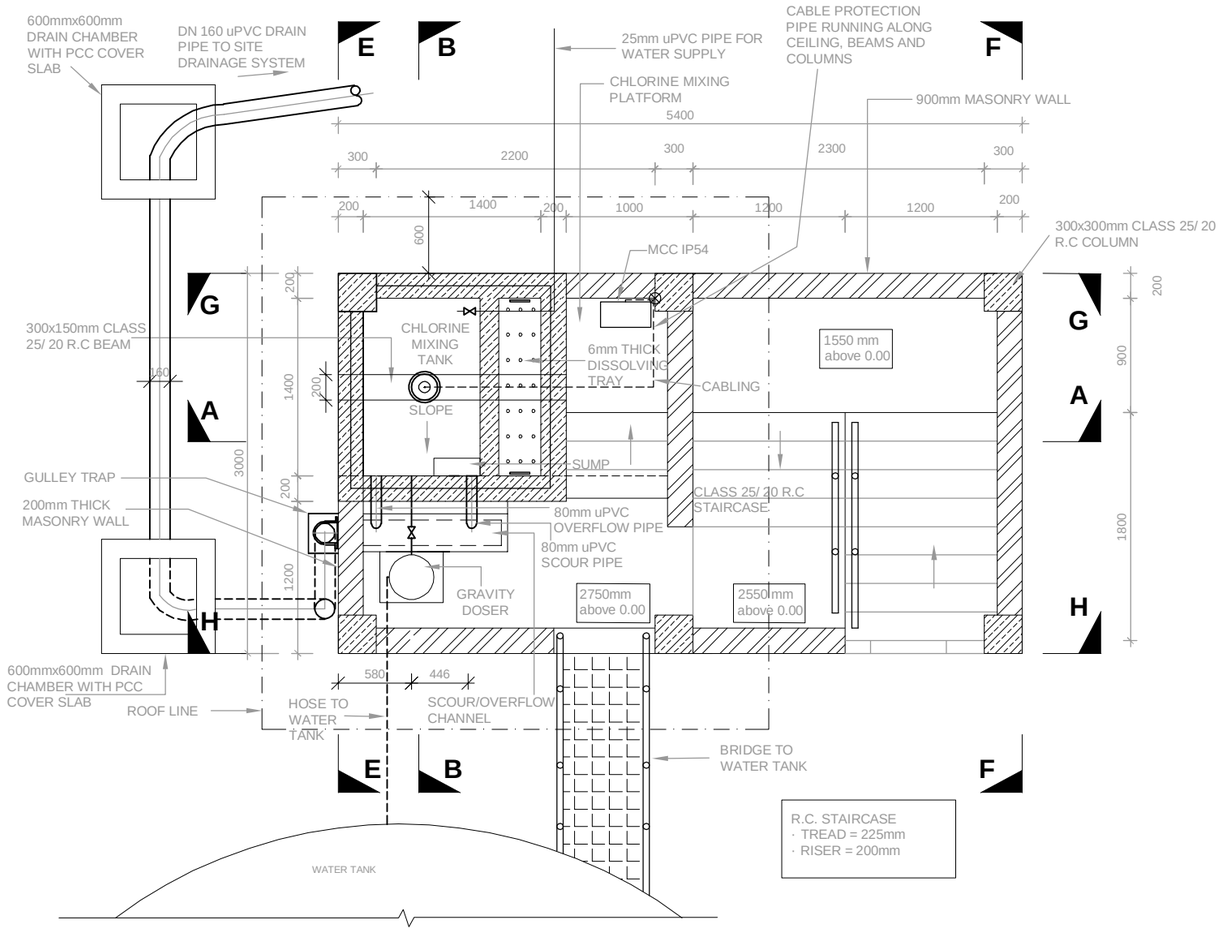

CHLORINATION BUILDING PLAN

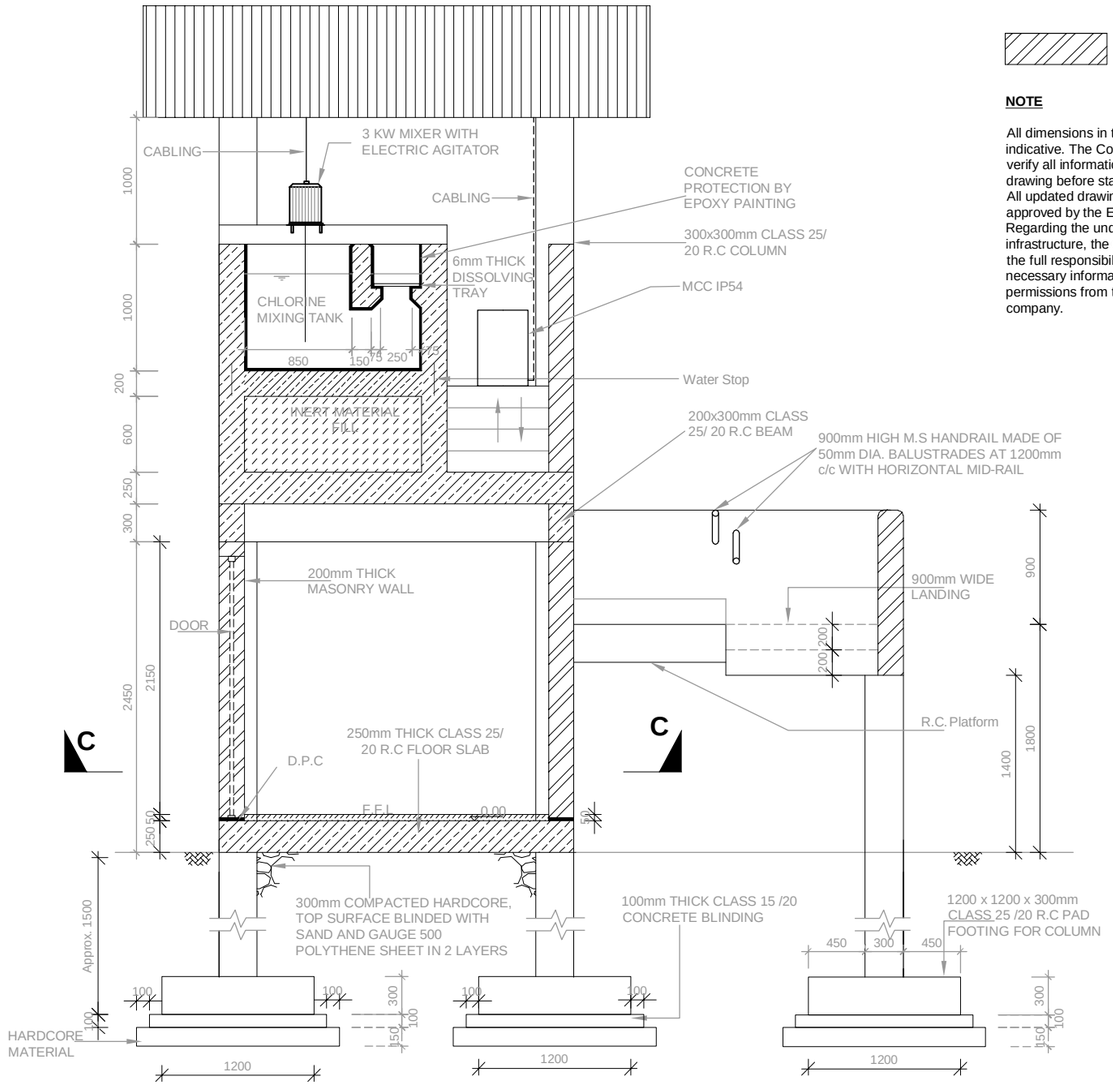

SECTION A - A

LEGEND

- REINFORCED CONCRETE
- MASS CONCRETE
- MASONRY

NOTE

All dimensions in this drawing are indicative. The Contractor has to verify all information on this drawing before starting the works. All updated drawings are to be approved by the Engineer. Regarding the underground infrastructure, the Contractor has the full responsibility to get all necessary information and permissions from the concerning company.

EMERGENCY WORKS FOR INCREASE OF WATER AVAILABILITY IN LIKONI

SHORT TERM TECHNICAL ASSISTANCE
MWACHE PROJECT

Client/Employer:
COAST WATER WORKS DEVELOPMENT AGENCY
P.O BOX 90417, 80100, MOMBASA. KENYA

Consulting Engineer:
GKW Consult GmbH
Augustaanlage 67
68165 Mannheim
GERMANY

Subconsultant:
ISEP
Heri Paradise, Suite 8C
Dennis Pritt Road
P.O. BOX 3271,
00200 - GPO, NAIROBI, KENYA

Revisions:

REV.	DATE	REMARKS

SURVEYED BY:
DESIGNED BY: C.O.
DRAWN BY: F.V.
CHECKED BY: C.O
APPROVED BY: J.B.

SCALE: Not to scale

Drawing Title:

TIWI WELLFIELD

Kaya Bombo and Magodzoni Reservoirs
Chlorination Building - Plan and Section A-A

Date:	Drg. No.	Sheet
08/2019	1210/K/010/A	10

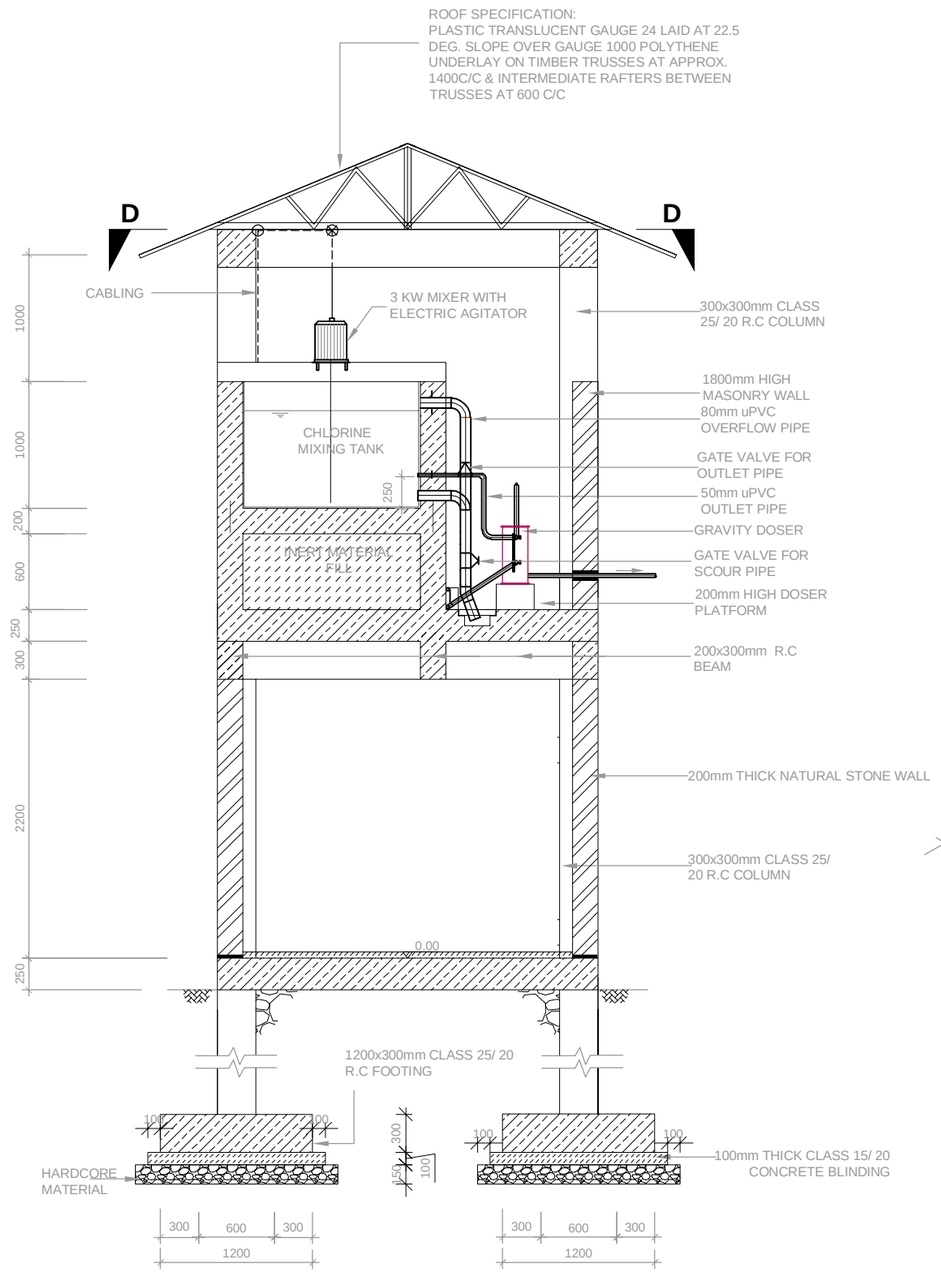

SECTION B - B

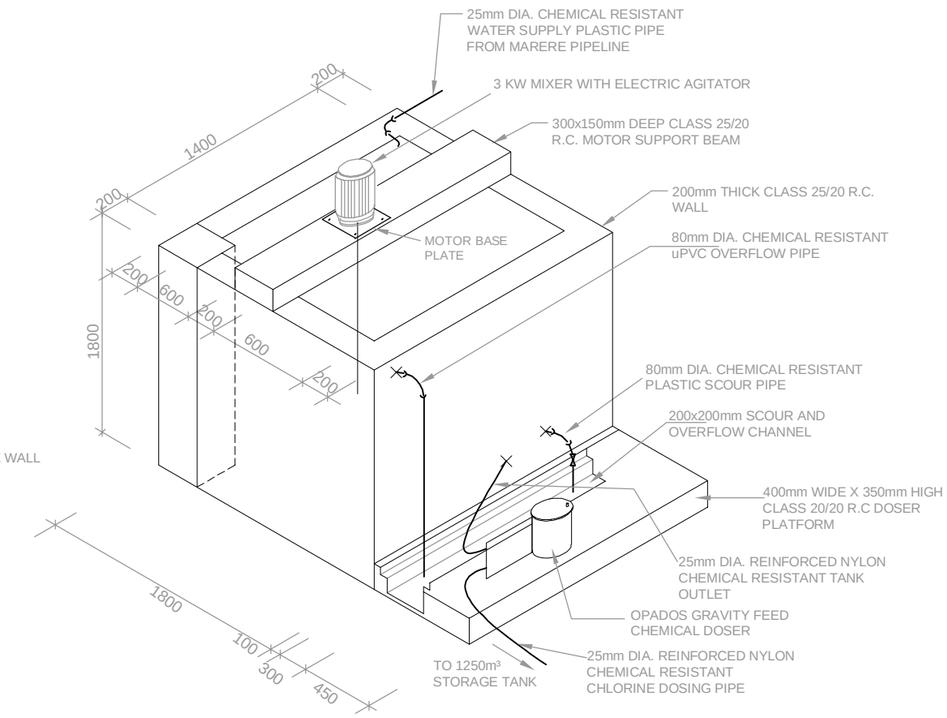

SCHEMATIC DETAIL OF CHLORINE MIXING TANKS

NOT TO SCALE

LEGEND

REINFORCED CONCRETE

MASS CONCRETE

MASONRY

NOTE

All dimensions in this drawing are indicative. The Contractor has to verify all information on this drawing before starting the works. All updated drawings are to be approved by the Engineer. Regarding the underground infrastructure, the Contractor has the full responsibility to get all necessary information and permissions from the concerning company.

EMERGENCY WORKS FOR INCREASE OF WATER AVAILABILITY IN LIKONI

SHORT TERM TECHNICAL ASSISTANCE
MWACHE PROJECT

Client/Employer:
COAST WATER WORKS DEVELOPMENT AGENCY
P.O BOX 90417, 80100, MOMBASA. KENYA

Consulting Engineer:
GKW Consult GmbH
Augustaanlage 67
68165 Mannheim
GERMANY

Subconsultant:
ISEP
Heri Paradise, Suite 8C
Dennis Pritt Road
P.O. BOX 3271,
00200 - GPO, NAIROBI, KENYA

Revisions:

REV.	DATE	REMARKS

SURVEYED BY:
DESIGNED BY: C.O.
DRAWN BY: F.V.
CHECKED BY: C.O
APPROVED BY: J.B.

SCALE: Not to scale

Drawing Title:

TIWI WELLFIELD

Kaya Bombo and Magodzoni Reservoirs
Chlorination Building - Section B-B and Mixing Tank Detail

Date:	Drg. No.	Sheet
08/2019	1210/K/011/A	11

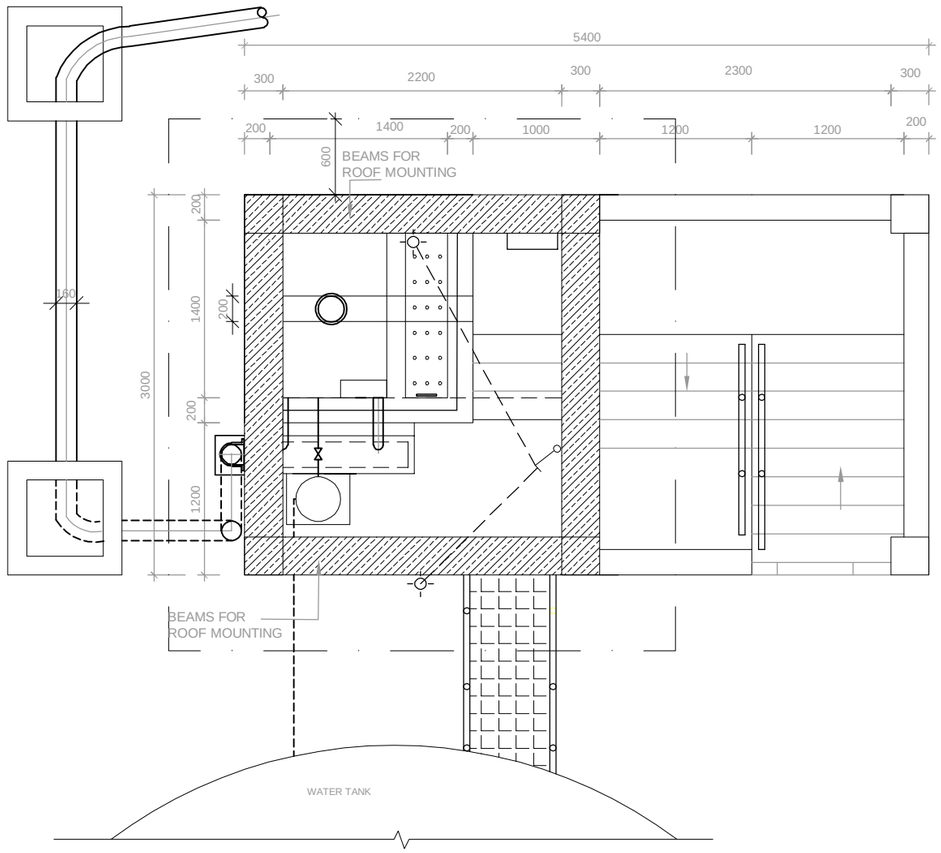

ELECTRICAL LAYOUT - CHLORINATION BUILDING
SECTION D-D

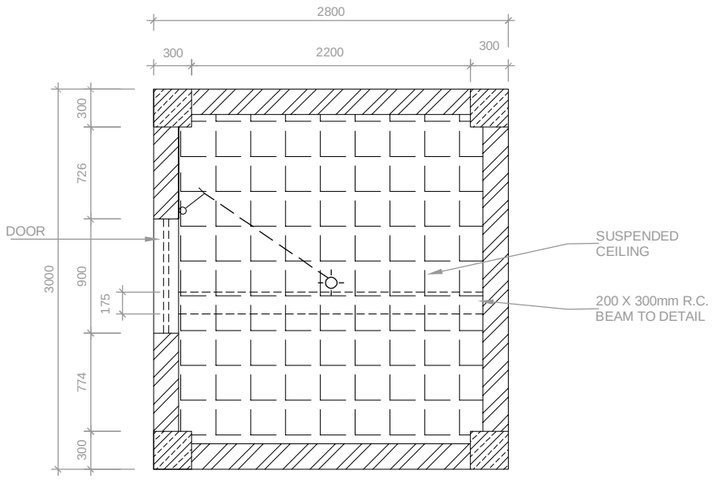

ELECTRICAL LAYOUT - CHLORINATION BUILDING
SECTION C-C

LEGEND

- REINFORCED CONCRETE
- MASS CONCRETE
- MASONRY
- LIGHTING MOUNTED ON BEAMS
- SWITCH, 1 WAY, 1 GANG

NOTE

All dimensions in this drawing are indicative. The Contractor has to verify all information on this drawing before starting the works. All updated drawings are to be approved by the Engineer. Regarding the underground infrastructure, the Contractor has the full responsibility to get all necessary information and permissions from the concerning company.

EMERGENCY WORKS FOR INCREASE OF WATER AVAILABILITY IN LIKONI

SHORT TERM TECHNICAL ASSISTANCE
MWACHE PROJECT

Client/Employer:
COAST WATER WORKS DEVELOPMENT AGENCY
P.O BOX 90417, 80100, MOMBASA. KENYA

Consulting Engineer:
GKW Consult GmbH
Augustaanlage 67
68165 Mannheim
GERMANY

Subconsultant:
ISEP
Heri Paradise, Suite 8C
Dennis Pritt Road
P.O. BOX 3271,
00200 - GPO, NAIROBI, KENYA

Revisions:

REV.	DATE	REMARKS

SURVEYED BY:
DESIGNED BY: C.O.
DRAWN BY: L.F.F.
CHECKED BY: C.O
APPROVED BY: J.B.
SCALE: 1/25
A3

Drawing Title:
TIWI WELLFIELD
Kaya Bombo and Magodzoni Reservoirs
Chlorination Building - Electrical Layout

Date: 08/2019
Drg. No. **1210/K/012/A**
Sheet 12

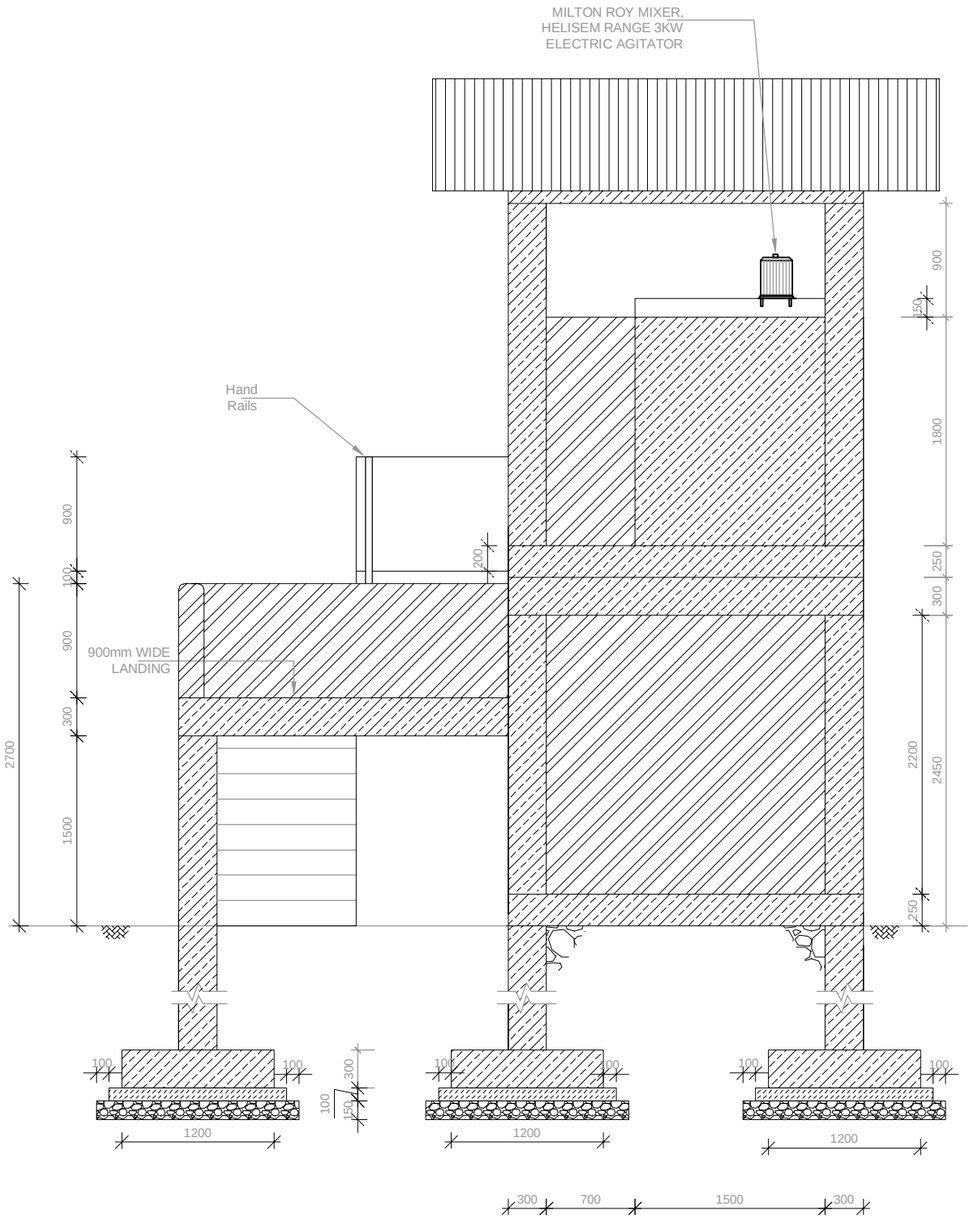

LEFT SIDE
SECTION G - G

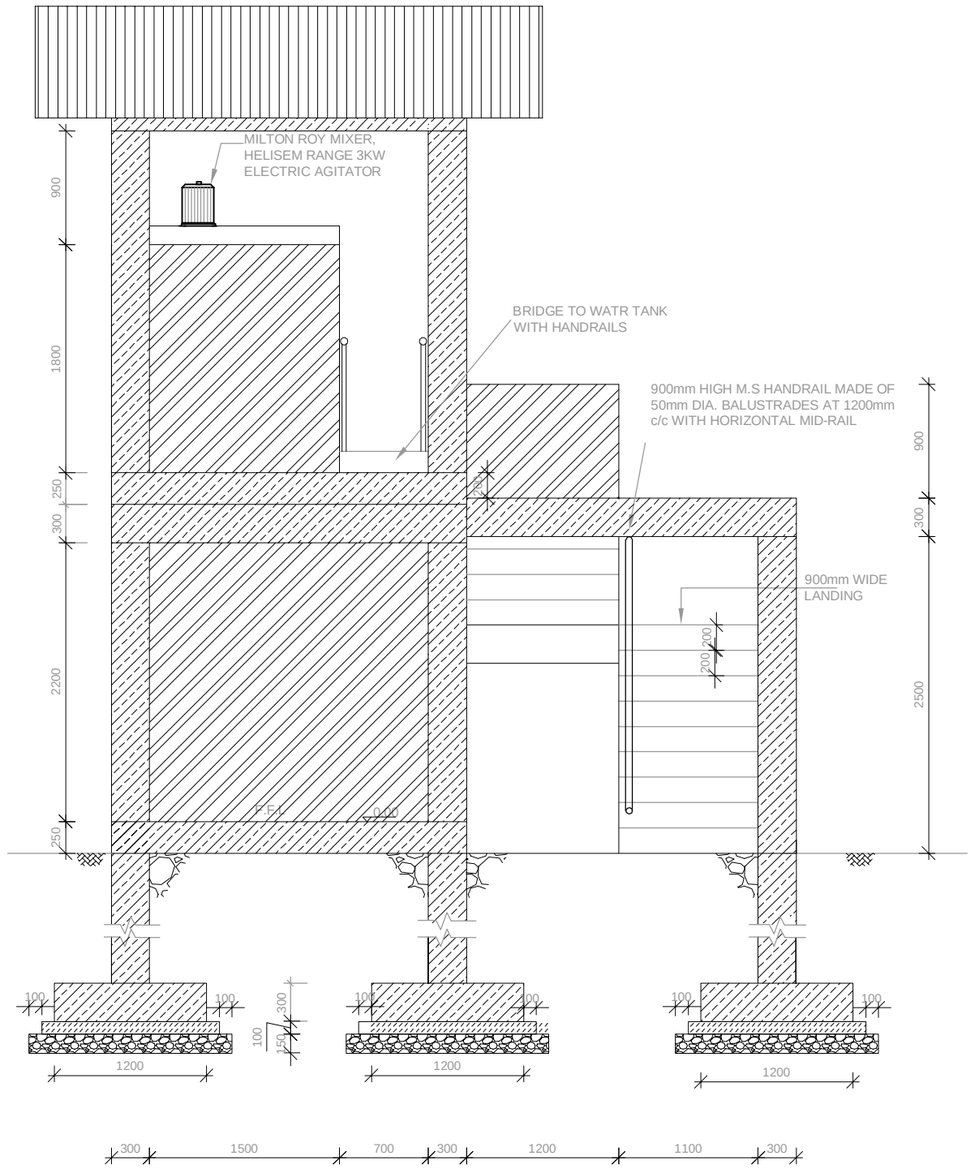

RIGHT SIDE
SECTION H - H

LEGEND

REINFORCI CONCRETE

MASS CONCRETE

MASONRY

NOTE

All dimensions in this drawing are indicative. The Contractor has to verify all information on this drawing before starting the works. All updated drawings are to be approved by the Engineer. Regarding the underground infrastructure, the Contractor has the full responsibility to get all necessary information and permissions from the concerning company.

EMERGENCY WORKS FOR INCREASE OF WATER AVAILABILITY IN LIKONI

SHORT TERM TECHNICAL ASSISTANCE
MWACHE PROJECT

Client/Employer:
COAST WATER WORKS DEVELOPMENT AGENCY
P.O BOX 90417, 80100, MOMBASA. KENYA

Consulting Engineer:
GKW Consult GmbH
Augustaanlage 67
68165 Mannheim
GERMANY

Subconsultant:
ISEP
Heri Paradise, Suite 8C
Dennis Pritt Road
P.O. BOX 3271,
00200 - GPO, NAIROBI, KENYA

Revisions:

REV.	DATE	REMARKS

SURVEYED BY:
DESIGNED BY: C.O.
DRAWN BY: F.V.
CHECKED BY: C.O
APPROVED BY: J.B.

SCALE:
Not to scale

Drawing Title:

TIWI WELLFIELD

Kaya Bombo and Magodzoni Reservoirs
Chlorination Building - Right View & Left View

Date:	Drg. No.	Sheet
08/2019	1210/K/013/A	13

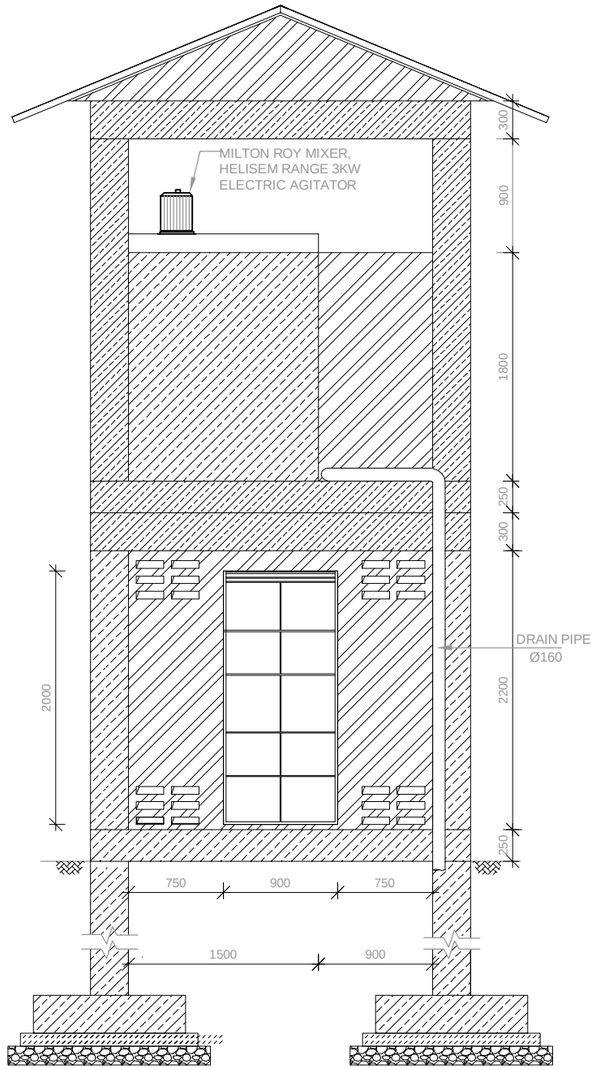

FRONT VIEW

SECTION E - E

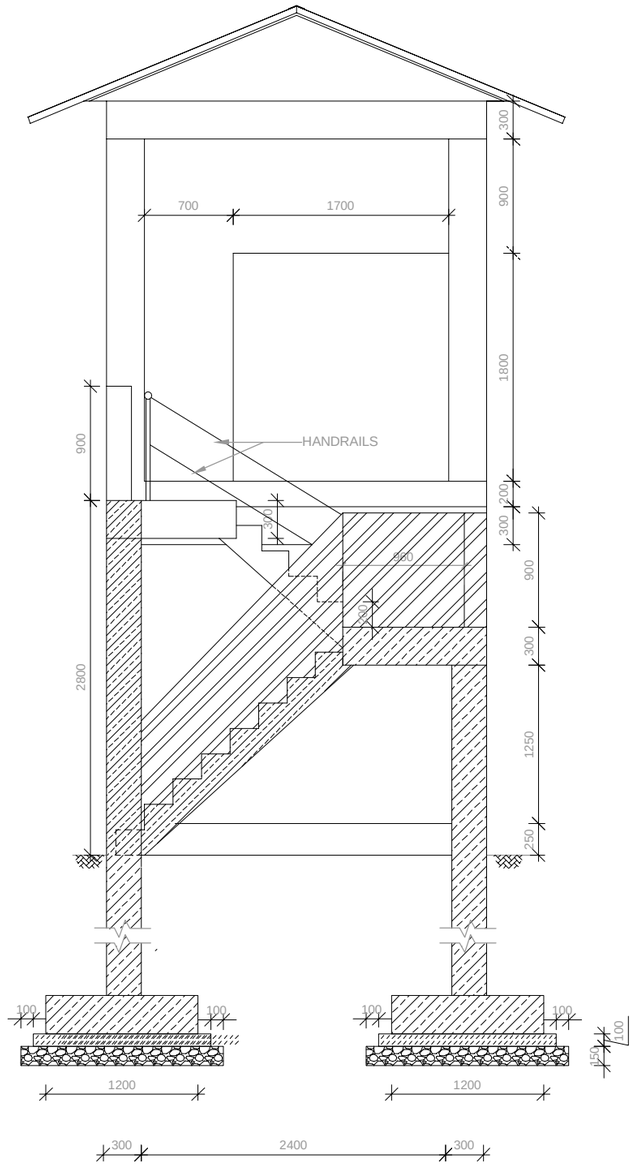

BACK VIEW

SECTION F - F

LEGEND

REINFORCED CONCRETE

MASS CONCRETE

MASONRY

NOTE

All dimensions in this drawing are indicative. The Contractor has to verify all information on this drawing before starting the works. All updated drawings are to be approved by the Engineer. Regarding the underground infrastructure, the Contractor has the full responsibility to get all necessary information and permissions from the concerning company.

EMERGENCY WORKS FOR INCREASE OF WATER AVAILABILITY IN LIKONI

SHORT TERM TECHNICAL ASSISTANCE
MWACHE PROJECT

Client/Employer:
COAST WATER WORKS DEVELOPMENT AGENCY
P.O BOX 90417, 80100, MOMBASA. KENYA

Consulting Engineer:
GKW Consult GmbH
Augustaanlage 67
68165 Mannheim
GERMANY

Subconsultant:
ISEP
Heri Paradise, Suite 8C
Dennis Pritt Road
P.O. BOX 3271,
00200 - GPO, NAIROBI, KENYA

Revisions:

REV.	DATE	REMARKS

SURVEYED BY:
DESIGNED BY: C.O.
DRAWN BY: F.V.
CHECKED BY: C.O
APPROVED BY: J.B.

SCALE: Not to scale

Drawing Title:

TIWI WELLFIELD

Kaya Bombo and Magodzoni Reservoirs
Chlorination Building - Front View & Back View

Date:	Drg. No.	Sheet
08/2019	1210/K/014/A	14

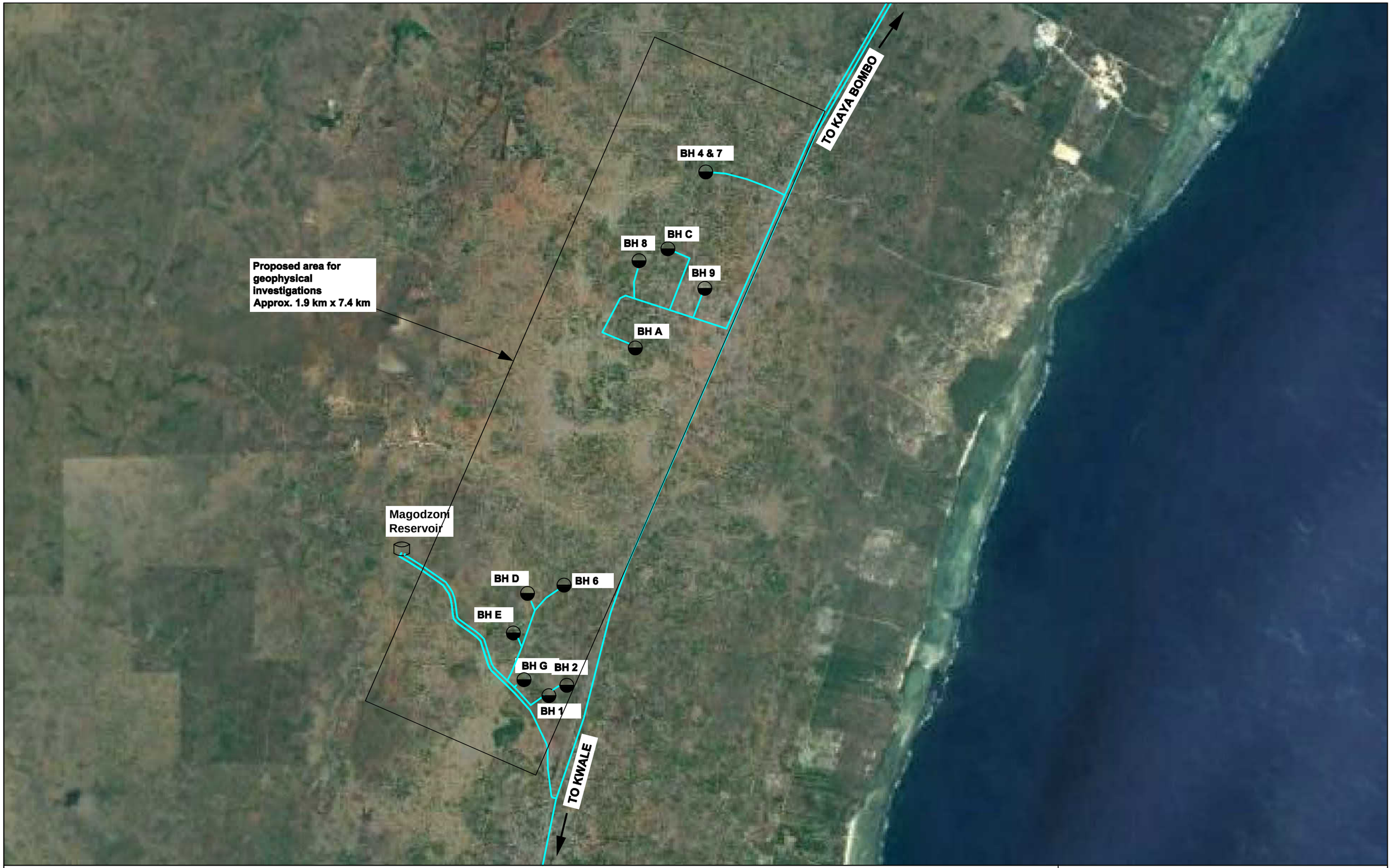

EMERGENCY WORKS FOR INCREASE OF WATER AVAILABILITY IN LIKONI

SHORT TERM TECHNICAL ASSISTANCE
MWACHE PROJECT

Client/Employer:

THE CHIEF EXECUTIVE OFFICER
COAST WATER WORKS DEVELOPMENT AGENCY
P.O BOX 90417, 80100, MOMBASA. KENYA

Consulting Engineer:

GKW CONSULT GMBH
Augustaanlage 67 - DE-68165
Mannheim
GERMANY
E-MAIL: info@gkw-consult.com
Tel : +49 621 41077-342
Fax : +49 621 41077-302

Subconsultant:

INTEGRATED SCIENCE AND
ENGINEERING PROJECTS LTD.
P.O. BOX 3271- 00200 NAIROBI, KENYA
E-MAIL: isep.ltd@gmail.com
Tel : +254-722306748

Revisions:

REV.	DATE	REMARKS

Note:

Position of Boreholes, Pipelines and Reservoirs are indicative.

SURVEYED BY:
DESIGNED BY: C.O.
DRAWN BY: B.H.
CHECKED BY: C.O.
APPROVED BY: J.B.

SCALE:
Not to scale

Drawing Title:

Tiwi Wellfield

Geophysical Investigations - Proposed Area

Date:	Drg. No.	Sheet
09/2019	1210/K/015A	15

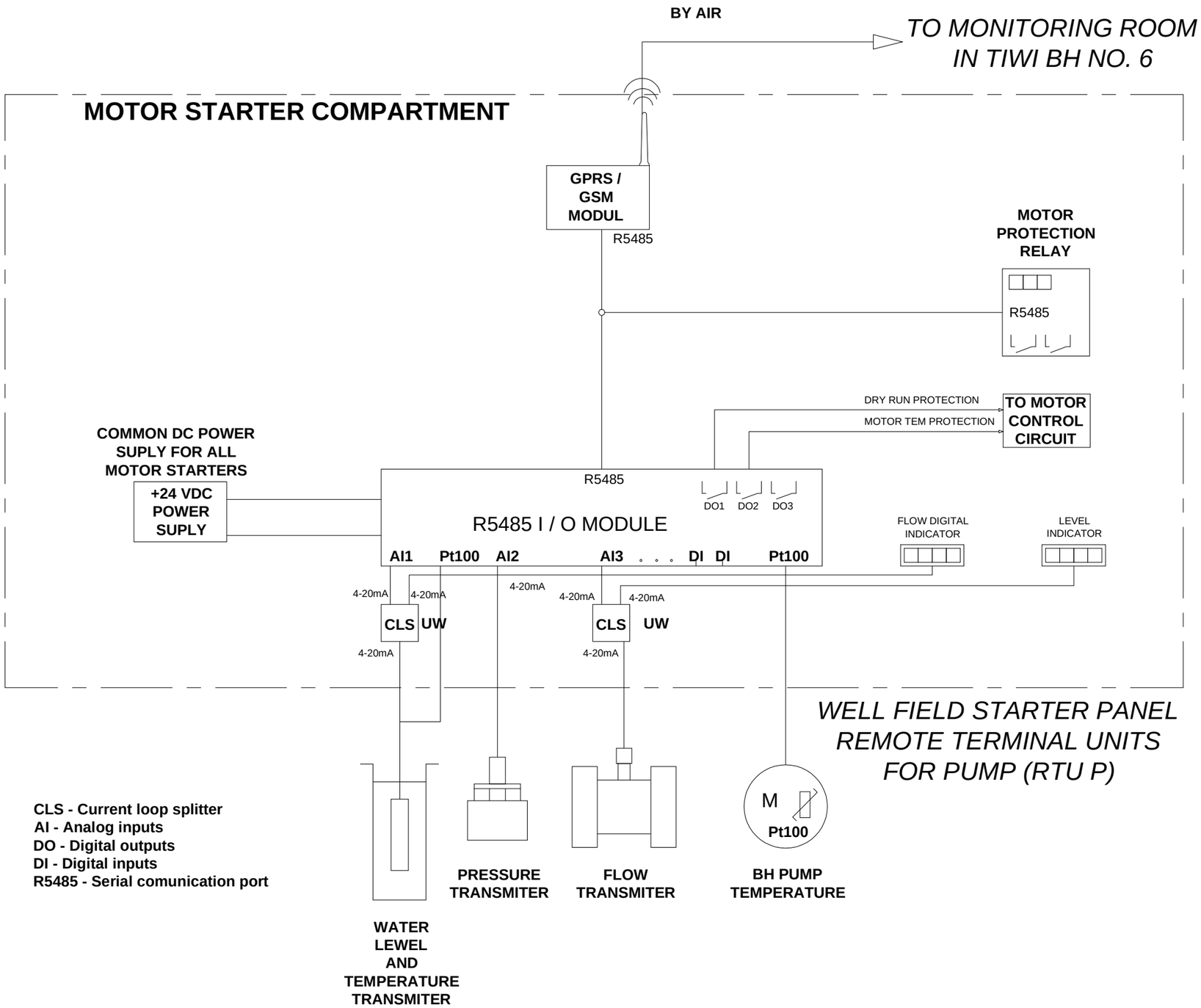

EMERGENCY WORKS FOR INCREASE OF WATER AVAILABILITY IN LIKONI

SHORT TERM TECHNICAL ASSISTANCE
MWACHE PROJECT

Client/Employer:
COAST WATER WORKS DEVELOPMENT AGENCY
P.O BOX 90417, 80100, MOMBASA. KENYA

Consulting Engineer:
GKW Consult GmbH
Augustaanlage 67
68165 Mannheim
GERMANY

Subconsultant:
ISEP
Heri Paradise, Suite 8C
Dennis Pritt Road
P.O. BOX 3271,
00200 - GPO, NAIROBI, KENYA

Revisions:

REV.	DATE	REMARKS

SURVEYED BY:	
DESIGNED BY:	C.O.
DRAWN BY:	O.M.O.
CHECKED BY:	C.O.
APPROVED BY:	J.B.

Drawing Title:

TIWI WELLFIELD

TIWI MONITORING SYSTEM
SHEET 1 of 2

Date:	Drg. No.	Sheet
07/2019	1210/K/016/A	16

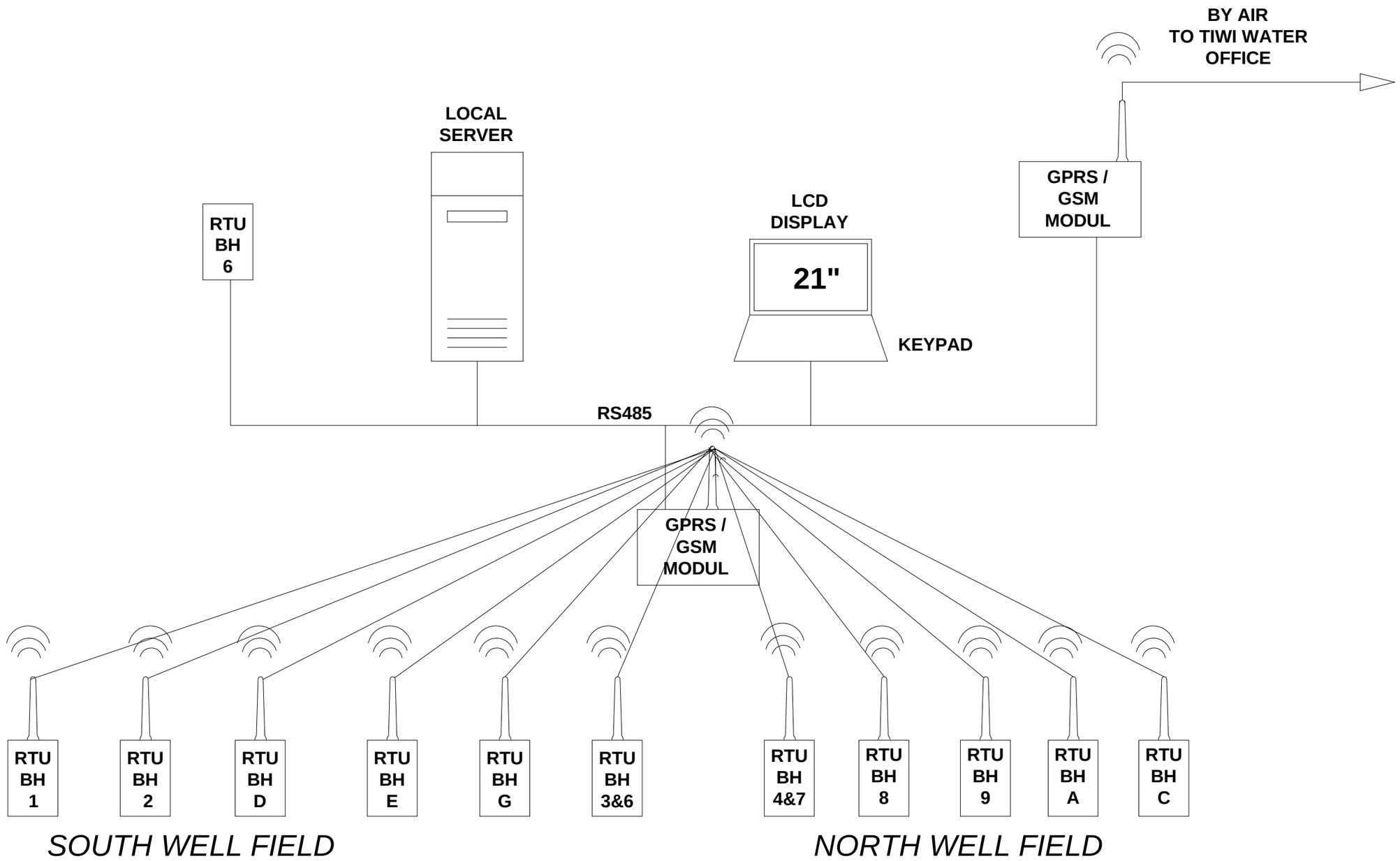

EMERGENCY WORKS FOR INCREASE OF WATER AVAILABILITY IN LIKONI

SHORT TERM TECHNICAL ASSISTANCE
MWACHE PROJECT

Client/Employer:
COAST WATER WORKS DEVELOPMENT AGENCY
P.O BOX 90417, 80100, MOMBASA. KENYA

Consulting Engineer:
GKW Consult GmbH
Augustaanlage 67
68165 Mannheim
GERMANY

Subconsultant:
ISEP
Heri Paradise, Suite 8C
Dennis Pritt Road
P.O. BOX 3271,
00200 - GPO, NAIROBI, KENYA

Revisions:

REV.	DATE	REMARKS

SURVEYED BY:
DESIGNED BY: C.O.
DRAWN BY: O.M.O.
CHECKED BY: C.O.
APPROVED BY: J.B.

Drawing Title:
TIWI WELLFIELD
TIWI MONITORING SYSTEM
SHEET 2 of 2

Date:	Drg. No.	Sheet
07/2019	1210/K/017/A	17

EMERGENCY WORKS FOR INCREASE OF WATER AVAILABILITY IN LIKONI

SHORT TERM TECHNICAL ASSISTANCE
MWACHE PROJECT

Client/Employer:

THE CHIEF EXECUTIVE OFFICER
COAST WATER WORKS DEVELOPMENT AGENGY
P.O BOX 90417, 80100, MOMBASA. KENYA

Consulting Engineer:

GKW CONSULT GMBH
Augustaanlage 67
68165 Mannheim
GERMANY
E-MAIL: info@gkw-consult.com
Tel : +49 621 41077-342
Fax : +49 621 41077-302

Subconsultant:

INTEGRATED SCIENCE AND ENGINEERING PROJECTS LTD.
P.O. BOX 3271- 00200 NAIROBI, KENYA
E-MAIL: isep.ltd@gmail.com
Tel : +254-722306748

Revisions:

REV.	DATE	REMARKS

Notes:

1. This drg is schematic and no dimensions to be scaled from it.
2. This drg. to be read in conjuction with the plan and profile drgs.

SURVEYED BY:	
DESIGNED BY:	C.O.
DRAWN BY:	N.M.W
CHECKED BY:	C.O.
APPROVED BY:	J.B.

SCALES:
Not to Scale

Drawing Title:

MARERE PARALLEL PIPELINE SYSTEM

SCHEMATIC LAYOUT PLAN OF MARERE PIPELINE

Date:	Drg. No.	Sheet
08/2019	1220/K/001A	18

Note:
All dimensions in this drawing are indicative. The Contractor has to verify all information on this drawing before starting the works. All updated drawings are to be approved by the Engineer. Regarding the underground infrastructure, the Contractor has the full responsibility to get all necessary information and permissions from the concerning company.

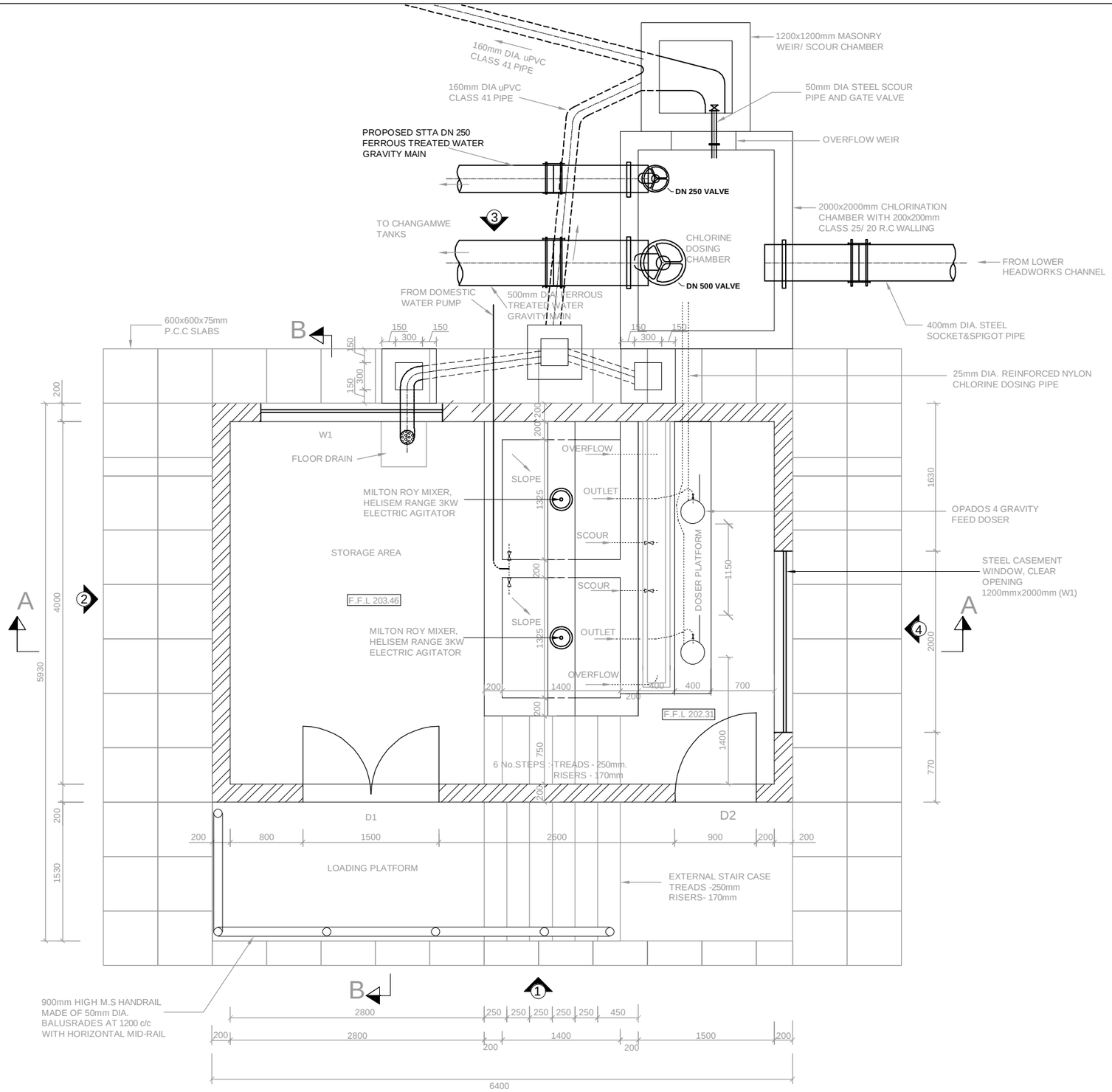

CHLORINATION BUILDING PLAN

SHORT TERM TECHNICAL ASSISTANCE (STTA) FOR COAST WATER SERVICES BOARD (CWSB) FOR LAUNCHING OF "IMPROVEMENT OF DRINKING WATER AND SANITATION SYSTEMS IN MOMBASA-MWACHE PROJECT"

SHORT TERM TECHNICAL ASSISTANCE

Client/Employer:
THE CHIEF EXECUTIVE OFFICER
COAST WATER SERVICES BOARD
P.O BOX 90417, 80100, MOMBASA. KENYA

Consulting Engineer:
JOINT VENTURE

GKW CONSULT GMBH
Augustaanlage 67 - DE-68165
Mannheim
GERMANY
E-MAIL: info@gkw-consult.com
Tel : +49 621 41077-342
Fax : +49 621 41077-302

INTEGRATED SCIENCE AND ENGINEERING PROJECTS LTD.
P.O. BOX 3271- 00200 NAIROBI, KENYA
E-MAIL: isep.ltd@gmail.com
Tel : +254-722306748

Revisions:

REV.	DATE	REMARKS

SURVEYED BY:
DESIGNED BY: C.O.
DRAWN BY: O.O.M
CHECKED BY: C.O.
APPROVED BY: J.B.

SCALE: Not to scale

Drawing Title:
MARERE PARALLEL PIPELINE SYSTEM
MARERE HEADWORKS - FLOW DIVISION STRUCTURE

Date:	Drg. No.	Sheet
08/2019	1220/K/002A	19

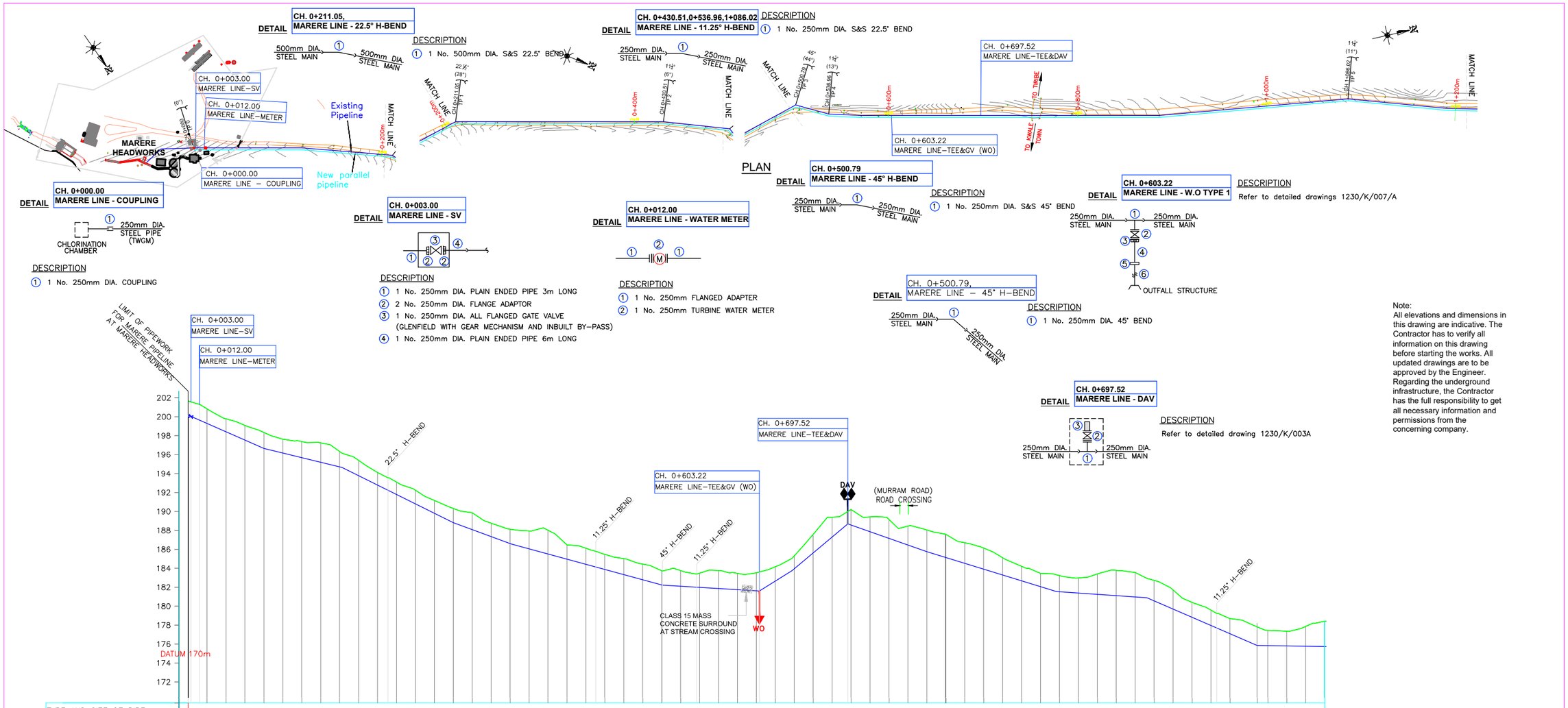

Note:
All elevations and dimensions in this drawing are indicative. The Contractor has to verify all information on this drawing before starting the works. All updated drawings are to be approved by the Engineer. Regarding the underground infrastructure, the Contractor has the full responsibility to get all necessary information and permissions from the concerning company.

LONGITUDINAL PARALLEL TO THE EXISTING PIPELINE
New DN 250 pipeline will be run parallel at 2 m distance to the existing pipeline

EMERGENCY WORKS FOR INCREASE OF WATER AVAILABILITY IN LIKONI

SHORT TERM TECHNICAL ASSISTANCE
MWACHE PROJECT

Client/Employer:
COAST WATER WORKS DEVELOPMENT AGENCY
P.O BOX 90417, 80100, MOMBASA. KENYA

Consulting Engineer:
GKW Consult GmbH
Augustaanlage 67
68165 Mannheim
GERMANY

Subconsultant:
ISEP
Heri Paradise, Suite 8C
Dennis Pritt Road
P.O. BOX 3271,
00200 - GPO, NAIROBI, KENYA

Revisions:

REV.	DATE	REMARKS

SURVEYED BY:
DESIGNED BY: C.O.
DRAWN BY: B.H.
CHECKED BY: C.O
APPROVED BY: J.B.
SCALES: Not to scale

Drawing Title:
MARERE PARALLEL PIPELINE SYSTEM
PLAN AND LONGITUDINAL PROFILE (cha 0+000 TO cha 1+200)
SHEET 1of 6

Date: 08/2019
Drg. No. **1220/K/003/A**
Sheet 20

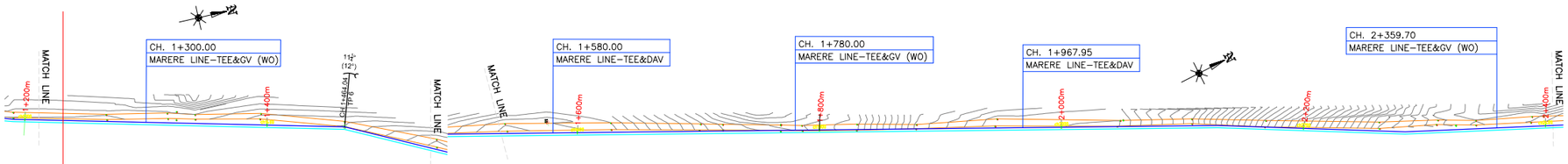

PLAN

DETAIL **CH. 1+300.00, 1+780.00, 2+359.70**
MARERE LINE - W.O TYPE1

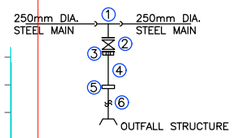

DESCRIPTION

Refer to detailed drawings 1230/K/007/A

DETAIL **CH. 1+464.04**
MARERE LINE - 11.25° H-BEND

DESCRIPTION

1 No. 250mm DIA. S&S 11.25° BEND

DETAIL **CH. 1+580.00, 1+967.65**
MARERE LINE - DAV

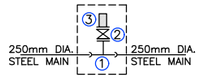

DESCRIPTION

Refer to detailed drawing 1230/K/003/A

Note:
All dimensions in this drawing are indicative. The Contractor has to verify all information on this drawing before starting the works. All updated drawings are to be approved by the Engineer. Regarding the underground infrastructure, the Contractor has the full responsibility to get all necessary information and permissions from the concerning company.

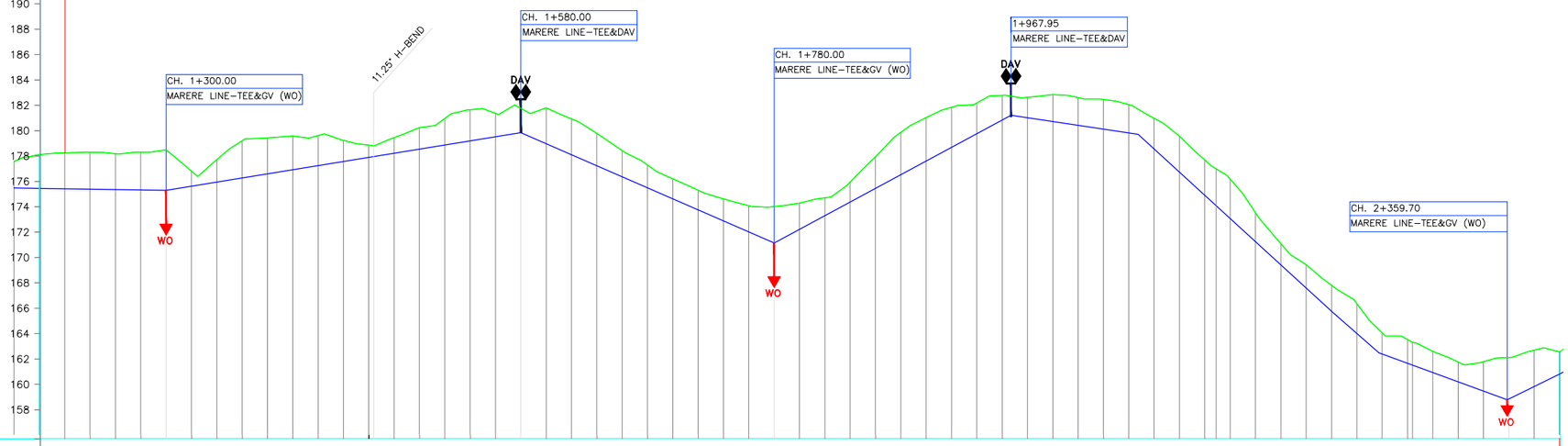

DATUM 156m

TYPE AND SIZE OF PIPE: NEW DN 250 PN25 HDPE PIPE

CHAINAGE (km)	GROUND LEVEL (m)	TRENCH BOTTOM LEVELS (m)	DEPTH OF PIPE INVERT (m)
1+200.00	178.41	175.74	2.67
1+220.00	178.55	175.71	2.84
1+240.00	178.59	175.68	2.91
1+260.00	178.48	175.65	2.83
1+280.00	178.6	175.62	2.98
1+300.00	178.79	175.59	3.2
1+320.00	177.11	175.91	1.19
1+340.00	178	176.24	1.76
1+360.00	179.49	176.56	2.93
1+380.00	179.72	176.89	2.84
1+400.00	179.88	177.21	2.67
1+420.00	179.92	177.54	2.38
1+440.00	179.53	177.86	1.66
1+460.00	179.15	178.19	0.96
1+480.00	179.75	178.51	1.23
1+500.00	180.52	178.84	1.68
1+520.00	181.25	179.17	2.09
1+540.00	181.94	179.49	2.45
1+560.00	181.66	179.82	1.84
1+580100	182.05	180.14	1.91
1+600.00	182.1	179.27	2.83
1+620.00	181.22	178.4	2.82
1+640.00	180.09	177.53	2.56
1+660.00	178.73	176.66	2.07
1+680.00	177.59	175.79	1.79
1+700.00	176.49	174.92	1.56
1+720.00	175.6	174.05	1.54
1+740.00	174.91	173.18	1.72
1+760.00	174.38	172.31	2.07
1+780.00	174.31	171.45	2.87
1+800.00	174.58	172.52	2.06
1+820.00	175	173.6	1.4
1+840.00	176.24	174.68	1.57
1+860.00	178.24	175.75	2.48
1+880.00	180.16	176.83	3.33
1+900.00	181.33	177.91	3.42
1+920.00	182.14	178.99	3.15
1+940.00	182.48	180.06	2.42
1+960.00	183.07	181.14	1.93
1+980.00	182.94	181.32	1.62
2+000.00	183.15	181.02	2.13
2+020.00	182.9	180.72	2.18
2+040.00	182.75	180.42	2.33
2+060.00	182.35	180.12	2.23
2+080.00	181.27	178.85	2.42
2+100.00	179.86	177.02	2.84
2+120.00	177.98	175.19	2.79
2+140.00	176.49	173.37	3.13
2+160.00	173.81	171.54	2.27
2+180.00	171.39	169.71	1.67
2+200.00	169.72	167.89	1.83
2+220.00	168.11	166.06	2.05
2+240.00	166.65	164.31	2.35
2+260.00	164.36	162.69	1.67
2+280.00	163.83	161.96	1.87
2+300.00	162.9	161.22	1.68
2+320.00	162.05	160.49	1.56
2+340.00	162.08	159.76	2.32
2+360.00	162.41	159.14	3.27
2+380.00	162.99	160.12	2.86
2+400.00	162.86	161.11	1.75

SLOPE OF PIPE m/km: 15.7, 60.9, 23, 18.7, 71.4, 11.0, 27.6

REFERENCE PEG No.: TF6

LONGITUDINAL PARALLEL TO THE EXISTING PIPELINE
New DN 250 pipeline will be run parallel at 2 m distance to the existing pipeline

EMERGENCY WORKS FOR INCREASE OF WATER AVAILABILITY IN LIKONI

SHORT TERM TECHNICAL ASSISTANCE
MWACHE PROJECT

Client/Employer:
COAST WATER WORKS DEVELOPMENT AGENCY
P.O BOX 90417, 80100, MOMBASA. KENYA

Consulting Engineer:
GKW Consult GmbH
Augustaanlage 67
68165 Mannheim
GERMANY

Subconsultant:
ISEP
Heri Paradise, Suite 8C
Dennis Pritt Road
P.O. BOX 3271,
00200 - GPO, NAIROBI, KENYA

Revisions:

REV.	DATE	REMARKS

SURVEYED BY:
DESIGNED BY: C.O.
DRAWN BY: B.H.
CHECKED BY: C.O
APPROVED BY: J.B.

SCALES:
Not to scale

Drawing Title:
MARERE PARALLEL PIPELINE SYSTEM
PLAN AND LONGITUDINAL PROFILE (cha 1+200 TO cha 2+400)
SHEET 2 of 6

Date: 08/2019
Drg. No. **1220/K/004/A**
Sheet 21

DETAIL — **CH. 2+540.00, 3+003.22**
MARERE LINE - DAV

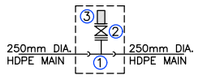

DESCRIPTION
1. 1 No. 250x80mm DIA. SOCKET&SPIGOT TEE WITH FLANGED BRANCH
2. 1 No. 80mm DIA ALL FLANGED GATE VALVE
3. 1 No. 80mm DIA DOUBLE ORIFICE AIR VALVE (VENT-O-MAT)

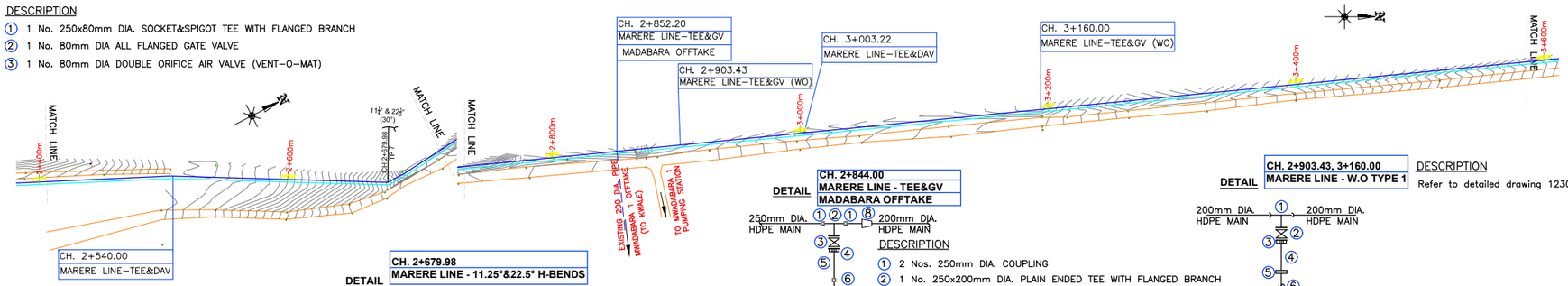

DETAIL — **CH. 2+844.00**
MARERE LINE - TEE&GV
MADABARA OFFTAKE

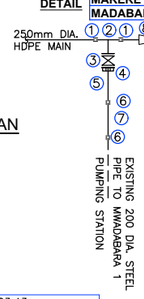

DESCRIPTION
1. 2 Nos. 250mm DIA. COUPLING
2. 1 No. 250x200mm DIA. PLAIN ENDED TEE WITH FLANGED BRANCH
3. 1 No. 200mm DIA. ALL FLANGED GATE VALVE
4. 1 No. 200mm DIA FLANGE ADAPTOR
5. 1 No. 200mm DIA PLAIN ENDED PIPE 1m LONG
6. 2 Nos. 200mm DIA COUPLINGS
7. 1 No. 200mm DIA PLAIN ENDED PIPE 6m LONG
8. 1 No. 250x200mm Reducer

DETAIL — **CH. 2+903.43, 3+160.00**
MARERE LINE - W.O TYPE 1

DESCRIPTION
Refer to detailed drawing 1230/K/007/A

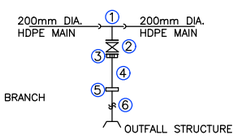

DETAIL — **CH. 2+679.98**
MARERE LINE - 11.25°&22.5° H-BENDS

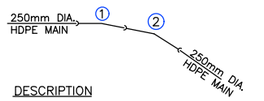

DESCRIPTION
1. 1 No. 250mm DIA. 11.25° SOCKET & SPIGOT BEND
2. 1 No. 250mm DIA. 22.5° SOCKET & SPIGOT BEND

PLAN

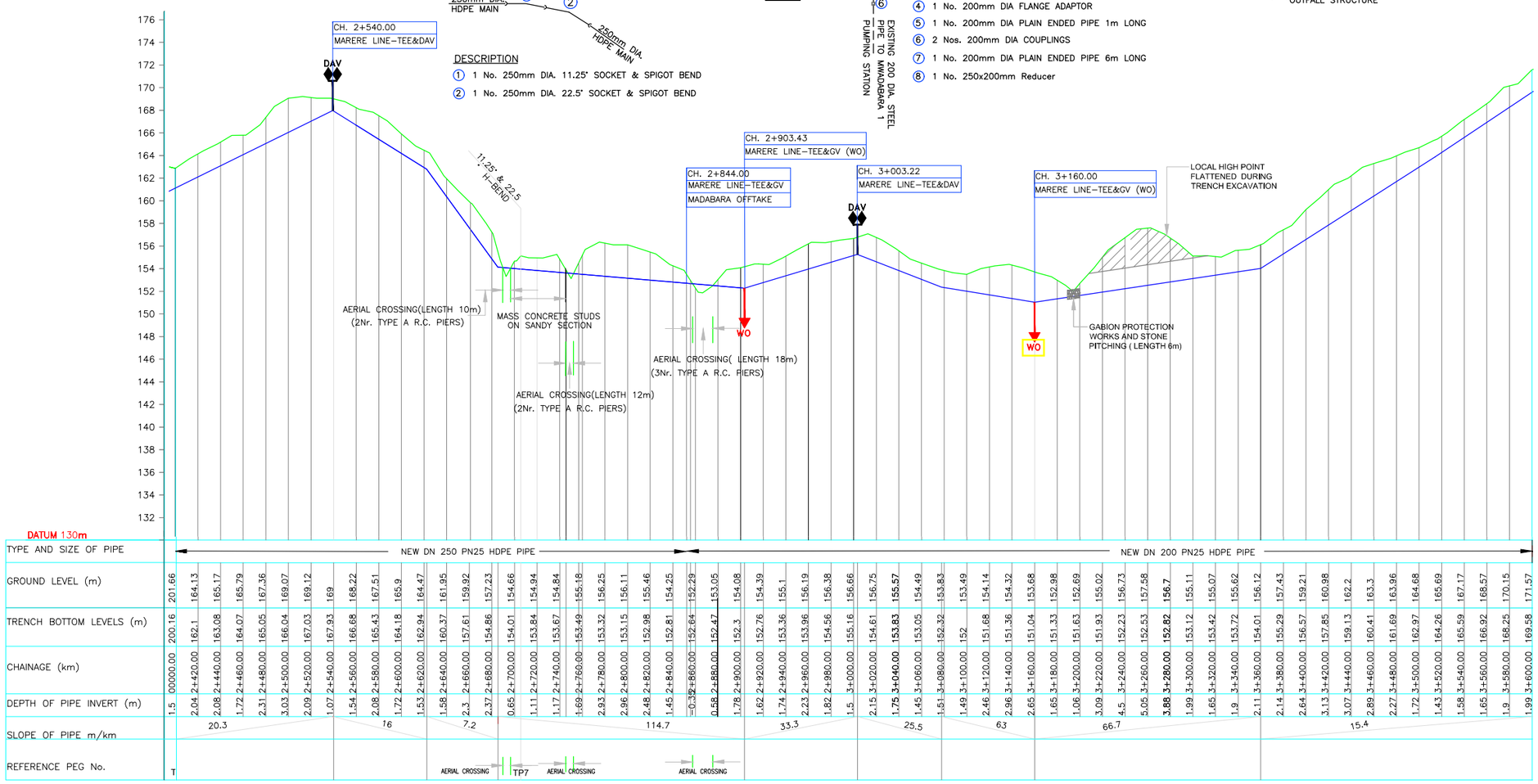

Note:
All dimensions in this drawing are indicative. The Contractor has to verify all information on this drawing before starting the works. All updated drawings are to be approved by the Engineer. Regarding the underground infrastructure, the Contractor has the full responsibility to get all necessary information and permissions from the concerning company.

LONGITUDINAL PARALLEL TO THE EXISTING PIPELINE
New DN 250 pipeline will be run parallel at 2 m distance to the existing pipeline

EMERGENCY WORKS FOR INCREASE OF WATER AVAILABILITY IN LIKONI

SHORT TERM TECHNICAL ASSISTANCE
MWACHE PROJECT

Client/Employer:
COAST WATER WORKS DEVELOPMENT AGENCY
P.O BOX 90417, 80100, MOMBASA. KENYA

Consulting Engineer:
GKW Consult GmbH
Augustaanlage 67
68165 Mannheim
GERMANY

Subconsultant:
ISEP
Heri Paradise, Suite 8C
Dennis Pritt Road
P.O. BOX 3271,
00200 - GPO, NAIROBI, KENYA

Revisions:

REV.	DATE	REMARKS

SURVEYED BY:
DESIGNED BY: C.O.
DRAWN BY: B.H.
CHECKED BY: C.O
APPROVED BY: J.B.

SCALES:
Not to scale

Drawing Title:
MARERE PARALLEL PIPELINE SYSTEM
PLAN AND LONGITUDINAL PROFILE (cha 2+400 TO cha 3+600)
SHEET 3 of 6

Date:	Drg. No.	Sheet
08/2019	1220/K/005/A	22

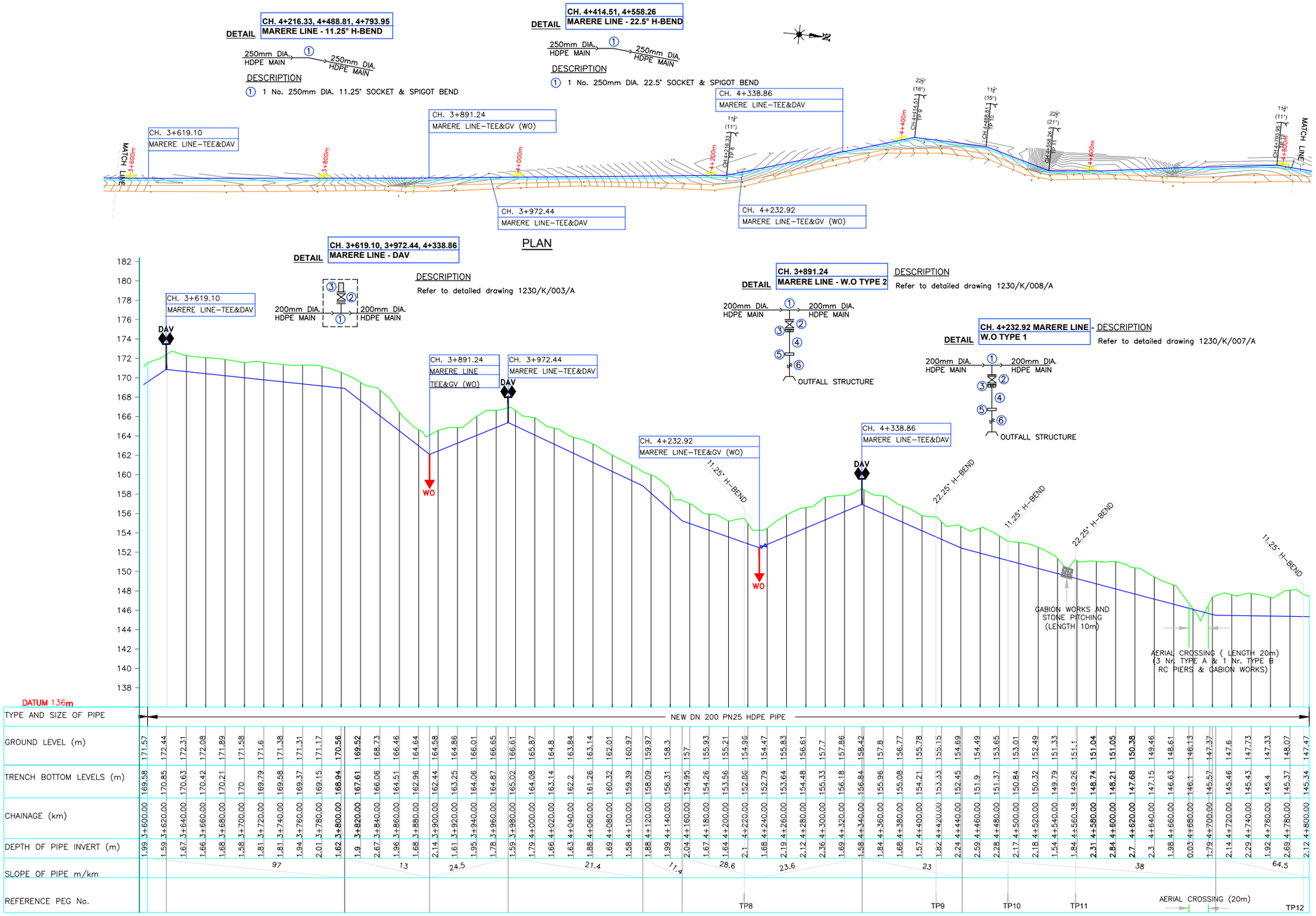

Note:
All dimensions in this drawing are indicative. The Contractor has to verify all information on this drawing before starting the works. All updated drawings are to be approved by the Engineer. Regarding the underground infrastructure, the Contractor has the full responsibility to get all necessary information and permissions from the concerning company.

LONGITUDINAL PARALLEL TO THE EXISTING PIPELINE
New DN 250 pipeline will be run parallel at 2 m distance to the existing pipeline

EMERGENCY WORKS FOR INCREASE OF WATER AVAILABILITY IN LIKONI

SHORT TERM TECHNICAL ASSISTANCE
MWACHE PROJECT

Client/Employer:
COAST WATER WORKS DEVELOPMENT AGENCY
P.O BOX 90417, 80100, MOMBASA. KENYA

Consulting Engineer:
GKW Consult GmbH
Augustaanlage 67
68165 Mannheim
GERMANY

Subconsultant:
ISEP
Heri Paradise, Suite 8C
Dennis Pritt Road
P.O. BOX 3271,
00200 - GPO, NAIROBI, KENYA

Revisions:

REV.	DATE	REMARKS

SURVEYED BY:
DESIGNED BY: C.O.
DRAWN BY: B.H.
CHECKED BY: C.O
APPROVED BY: J.B.

SCALES:
Not to scale

Drawing Title:
MARERE PARALLEL PIPELINE SYSTEM
PLAN AND LONGITUDINAL PROFILE (cha 3+600 TO cha 4+800)
SHEET 4 of 6

Date:	Drg. No.	Sheet
08/2019	1220/K/006/A	23

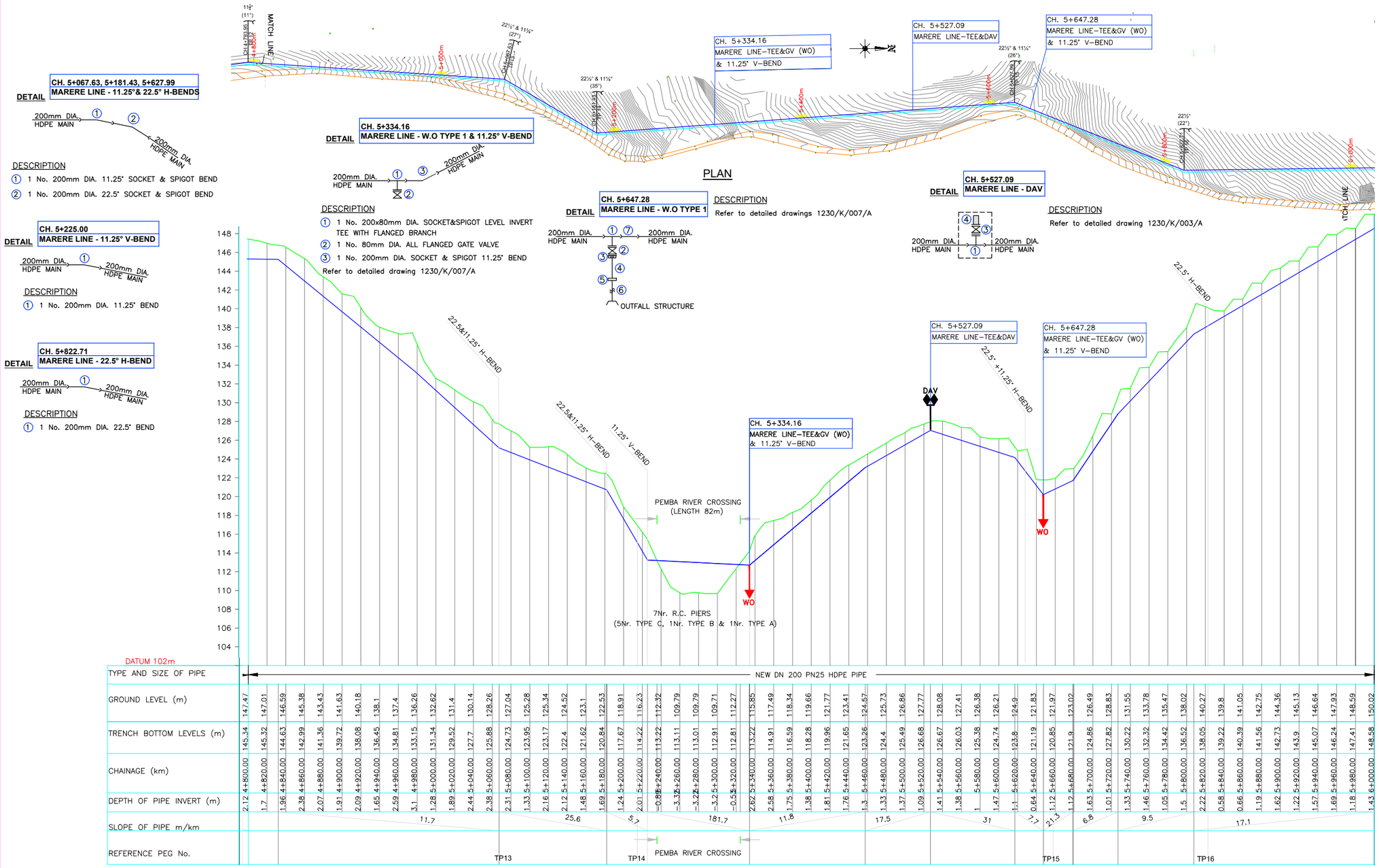

Note:
All dimensions in this drawing are indicative. The Contractor has to verify all information on this drawing before starting the works. All updated drawings are to be approved by the Engineer. Regarding the underground infrastructure, the Contractor has the full responsibility to get all necessary information and permissions from the concerning company.

LONGITUDINAL PARALLEL TO THE EXISTING PIPELINE
New DN 250 pipeline will be run parallel at 2 m distance to the existing pipeline

EMERGENCY WORKS FOR INCREASE OF WATER AVAILABILITY IN LIKONI

SHORT TERM TECHNICAL ASSISTANCE
MWACHE PROJECT

Client/Employer:
COAST WATER WORKS DEVELOPMENT AGENCY
P.O BOX 90417, 80100, MOMBASA. KENYA

Consulting Engineer:
GKW Consult GmbH
Augustaanlage 67
68165 Mannheim
GERMANY

Subconsultant:
ISEP
Heri Paradise, Suite 8C
Dennis Pritt Road
P.O. BOX 3271,
00200 - GPO, NAIROBI, KENYA

Revisions:

REV.	DATE	REMARKS

SURVEYED BY:
DESIGNED BY: C.O.
DRAWN BY: B.H.
CHECKED BY: C.O
APPROVED BY: J.B.

SCALES:
Not to scale

Drawing Title:
MARERE PARALLEL PIPELINE SYSTEM
PLAN AND LONGITUDINAL PROFILE (cha 4+800 TO cha 6+000)
SHEET 5 of 6

Date:	Drg. No.	Sheet
08/2019	1220/K/007/A	24

PLAN

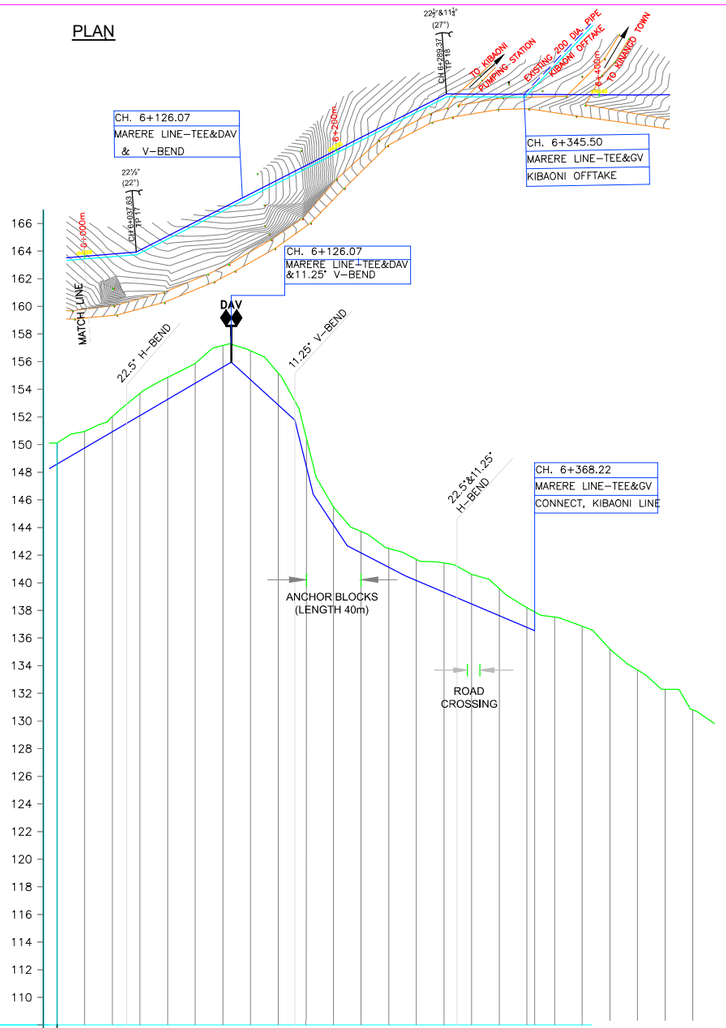

DATUM 108m

| | | |

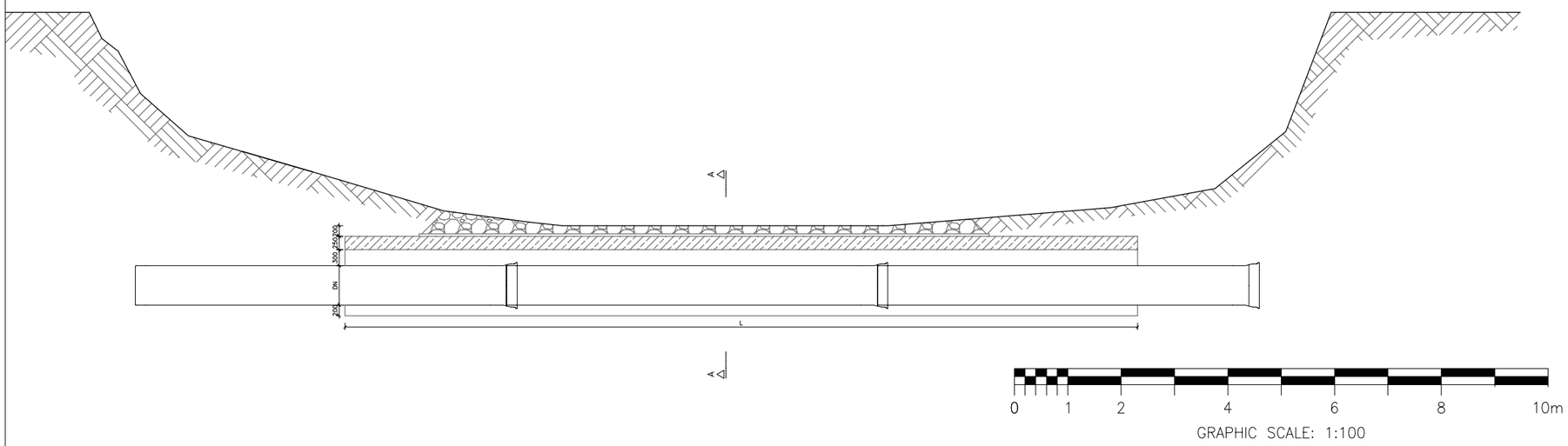

SECTION A–A

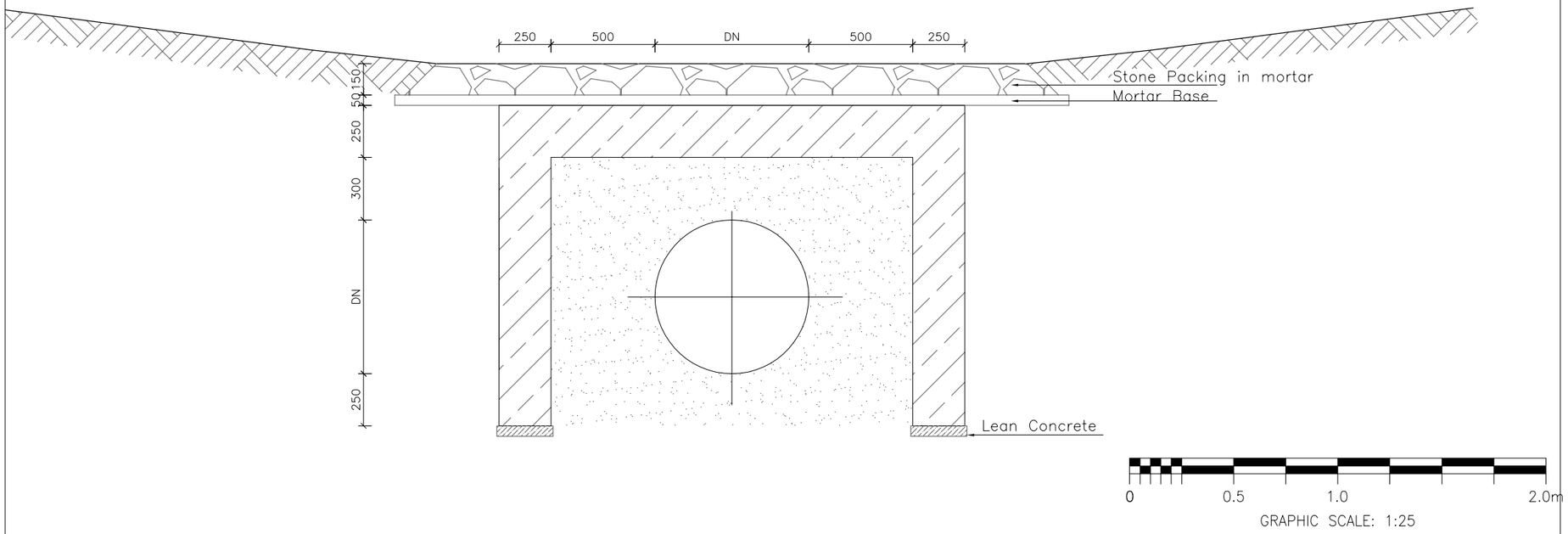

KEYPLAN

LEGEND

- Concrete
- Mass concrete
- Sand

1. All dimensions and levels are in millimeters unless indicated otherwise.
2. All Diameter Nominal of a pipe (ND) are in millimeters.
3. The contractor is to confirm pipe work (levels, diameter, etc.) prior to material order; Modifications are subject to the approval by the engineer.

EMERGENCY WORKS FOR INCREASE OF WATER AVAILABILITY IN LIKONI

SHORT TERM TECHNICAL ASSISTANCE
MWACHE PROJECT

Client/Employer:
COAST WATER WORKS DEVELOPMENT AGENCY
P.O BOX 90417, 80100, MOMBASA. KENYA

Consulting Engineer:
GKW Consult GmbH
Augustaanlage 67
68165 Mannheim
GERMANY

Subconsultant:
ISEP
Heri Paradise, Suite 8C
Dennis Pritt Road
P.O. BOX 3271,
00200 - GPO, NAIROBI, KENYA

Revisions:

REV.	DATE	REMARKS

SURVEYED BY:
DESIGNED BY: C.O.
DRAWN BY: O.M.O.
CHECKED BY: C.O.
APPROVED BY: J.B.

SCALES:
See Above

Drawing Title:
MARERE PARALLEL PIPELINE SYSTEM
PEMBA RIVER / CREEK UNDERCORSSING - PLAN AND PROFILE

Date:	Drg. No.	Sheet
05/2020	1220/K/009A	26

NEW JUNCTION TO MADABARA OFF TAKE

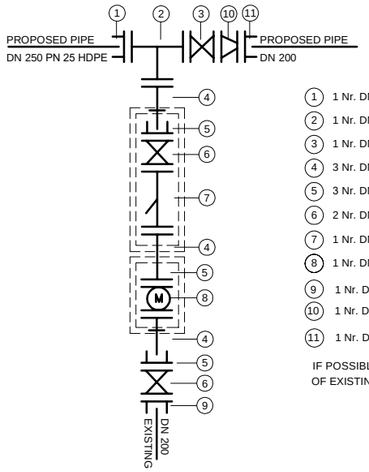

DESCRIPTION

1. 1 Nr. DN 250 FLANGED ADAPTOR
2. 1 Nr. DN 250/200 ALL FLANGED TEE
3. 1 Nr. DN 250 DOUBLE FLANGED GATE VALVE
4. 3 Nr. DN 200 SINGLE FLANGED PIPE WITH PUDDLE FLANGE *CUT TO SUIT
5. 3 Nr. DN 200 FLANGED ADAPTOR
6. 2 Nr. DN 200 DOUBLE FLANGED GATE VALVE
7. 1 Nr. DN 200 DOUBLE FLANGED STRAINER
8. 1 Nr. DN 200 DOUBLE FLANGED BULK METER
9. 1 Nr. DN 200 FLANGED ADAPTOR TO SUIT EXISTING MATERIAL
10. 1 Nr. DN 250/200 REDUCER
11. 1 Nr. DN 200 FLANGED ADAPTOR

IF POSSIBLE (4) (9) TO BE REPLACED FROM DISMANTLED ASSEMBLY OF EXISTING MADABARA OFFTAKE.

EXISTING JUNCTIONS TO MADABARA & KIBAONI OFFTAKE

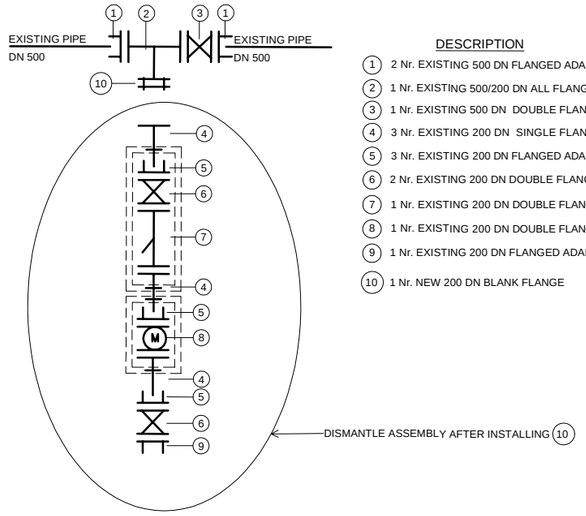

DESCRIPTION

1. 2 Nr. EXISTING 500 DN FLANGED ADAPTOR
2. 1 Nr. EXISTING 500/200 DN ALL FLANGED TEE
3. 1 Nr. EXISTING 500 DN DOUBLE FLANGED GATE VALVE
4. 3 Nr. EXISTING 200 DN SINGLE FLANGED PIPE WITH PUDDLE FLANGE*CUT TO SUIT
5. 3 Nr. EXISTING 200 DN FLANGED ADAPTOR
6. 2 Nr. EXISTING 200 DN DOUBLE FLANGED GATE VALVE
7. 1 Nr. EXISTING 200 DN DOUBLE FLANGED STRAINER
8. 1 Nr. EXISTING 200 DN DOUBLE FLANGED BULK METER
9. 1 Nr. EXISTING 200 DN FLANGED ADAPTOR TO SUIT EXISTING MATERIAL
10. 1 Nr. NEW 200 DN BLANK FLANGE

NOTES

THE INFORMATIONS GIVEN THIS DRAWING ARE INDICATIVE. THE CONTRACTOR HAS TO BE VERIFIED ALL INFORMATION ON THIS DRAWING BEFORE STARTING THE WORKS. ALL UPDATED DRAWINGS ARE TO BE APPROVED BY THE ENGINEER. REGARDING THE UNDERGROUND INFRASTRUCTURE, THE CONTRACTOR HAS THE FULL RESPONSIBILITY TO GET ALL NECESSARY INFORMATION AND PERMISSIONS FROM THE CONCERNING COMPANY.

NEW CONNECTION TO KIBAONI PIPELINE

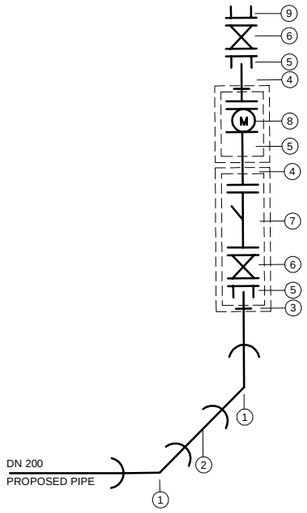

DESCRIPTION

1. 2 Nr. DN 200 45° SOCKET AND SPIGOT BEND
2. 1 Nr. DN 200 SOCKET AND SPIGOT PIPE
3. 1 Nr. DN 200 PIPE WITH PUDDLE FLANGE CUT TO SUIT
4. 2 Nr. DN 200 SINGLE FLANGED PIPE WITH PUDDLE FLANGE*CUT TO SUI
5. 3 Nr. DN 200 FLANGED ADAPTOR
6. 2 Nr. DN 200 DOUBLE FLANGED GATE VALVE
7. 1 Nr. DN 200 DOUBLE FLANGED STRAINER
8. 1 Nr. DN 200 DOUBLE FLANGED BULK METER
9. 1 Nr. DN 200 FLANGED ADAPTOR TO SUIT EXISTING MATERIAL

IF POSSIBLE (4) (9) TO BE REPLACED FROM DISMANTLED ASSEMBLY OF EXISTING KIBAONI OFFTAKE.

DETAIL 4: JUNCTION TO EXISTING OFFTAKES (1 No.)

JUNCTION TO:- KAYABOMBO RESERVOIR

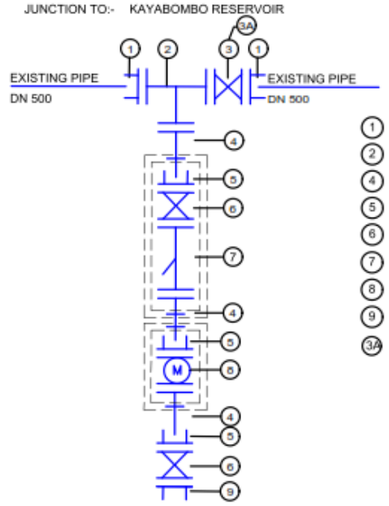

DESCRIPTION

1. 2 Nr. DN 250 FLANGED ADAPTOR
2. 1 Nr. DN 250 DOUBLE FLANGED LONG RADIUS BEND
4. 3 Nr. DN 200 SINGLE FLANGED PIPE WITH PUDDLE FLANGE*CUT TO SUIT
5. 3 Nr. DN 200 FLANGE ADAPTOR
6. 2 Nr. DN 200 DOUBLE FLANGED GATE VALVE
7. 1 Nr. DN 200 DOUBLE FLANGED STRAINER
8. 1 Nr. DN 200 DOUBLE FLANGED BULK METER
9. 1 Nr. DN 200 FLANGE ADAPTOR TO SUIT EXISTING MATERIAL

3A REMOVE (3) AND REPLACE WITH CONSTANT FLOW CONTROL VALVE

EMERGENCY WORKS FOR INCREASE OF WATER AVAILABILITY IN LIKONI

SHORT TERM TECHNICAL ASSISTANCE
MWACHE PROJECT

Client/Employer:
COAST WATER WORKS DEVELOPMENT AGENCY
P.O BOX 90417, 80100, MOMBASA. KENYA

Consulting Engineer:
GKW Consult GmbH
Augustaanlage 67
68165 Mannheim
GERMANY

Subconsultant:
ISEP
Heri Paradise, Suite 8C
Dennis Pritt Road
P.O. BOX 3271,
00200 - GPO, NAIROBI, KENYA

Revisions:

REV.	DATE	REMARKS

SURVEYED BY:
DESIGNED BY: C.O.
DRAWN BY: F.V.
CHECKED BY: C.O
APPROVED BY: J.B.

Drawing Title:
MARERE PARALLEL PIPELINE SYSTEM
MADABARRA AND KIBAONI JUNCTION DETAILS

Date: 09/2019
Drg. No. **1220/K/010/A**
Sheet 27

Note:
All informations in this drawing are indicative. The Contractor has to verify all information on this drawing before starting the works. All updated drawings are to be approved by the Engineer. Regarding the underground infrastructure, the Contractor has the full responsibility to get all necessary information and permissions from the concerning company.

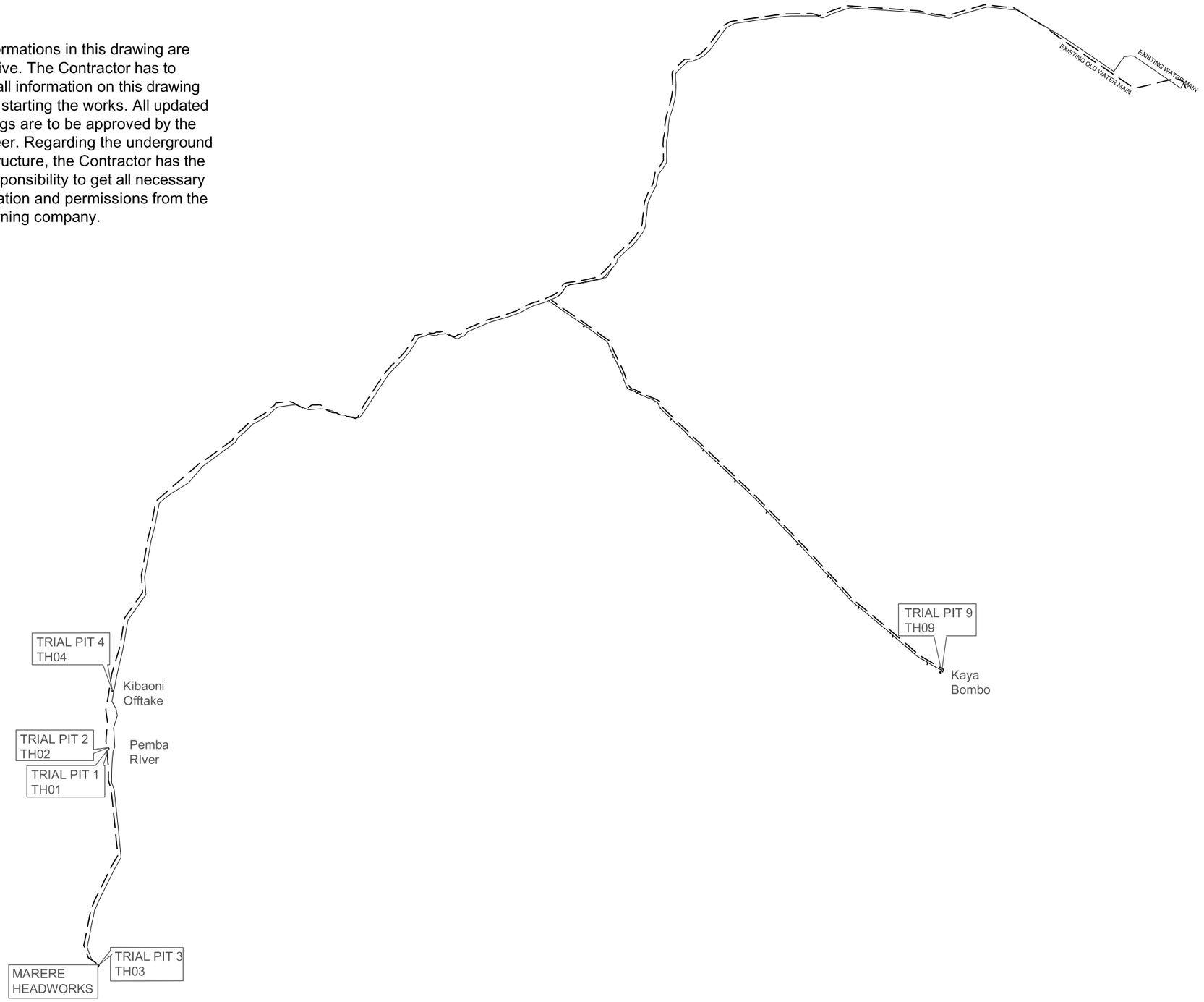

TH01 - Pemba River
- Near the old pump sump
GPS E: 546144.3
N: 9540594

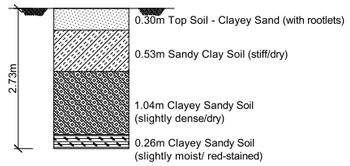

TH02 - Pemba River
- Next to the embankment
GPS E: 546127.8
N: 9540669

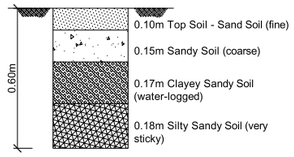

TH03 - Marere Headworks
- Near the sedimentation/chlorination tanks
GPS E: 545916.6
N: 9535713

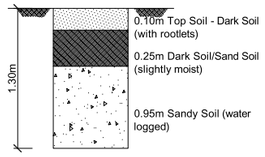

TH04 - Kibaoni Area
GPS E: 546232.3
N: 9541898

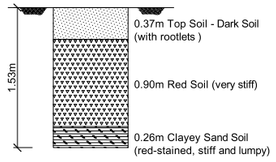

TH09 - Kayabombo Reservoir site
GPS E: 564916
N: 9542321

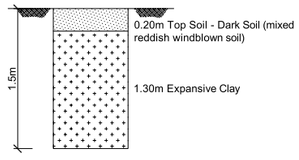

EMERGENCY WORKS FOR INCREASE OF WATER AVAILABILITY IN LIKONI

SHORT TERM TECHNICAL ASSISTANCE
MWACHE PROJECT

Client/Employer:
COAST WATER WORKS DEVELOPMENT AGENCY
P.O BOX 90417, 80100, MOMBASA. KENYA

Consulting Engineer:
GKW Consult GmbH
Augustaanlage 67
68165 Mannheim
GERMANY

Subconsultant:
ISEP
Heri Paradise, Suite 8C
Dennis Pritt Road
P.O. BOX 3271,
00200 - GPO, NAIROBI, KENYA

Revisions:		
REV.	DATE	REMARKS

SURVEYED BY:
DESIGNED BY: C.O.
DRAWN BY: A.R.A
CHECKED BY: C.O
APPROVED BY: J.B.

SCALES:
Not to scale

Drawing Title:
MARERE PARALLEL PIPELINE SYSTEM
GEOTECHNICAL TRIAL HOLES

Date:	Drg. No.	Sheet
08/2019	P.721771/H/1220/K/011/A	28

AIR VALVE CHAMBER - DN150 to DN250

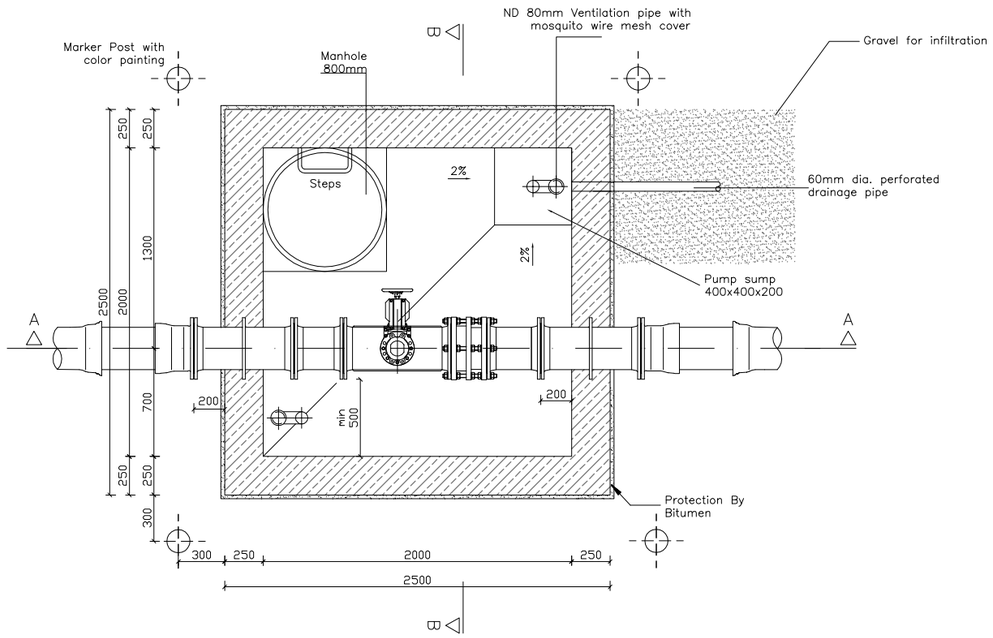

PLAN OF CHAMBER

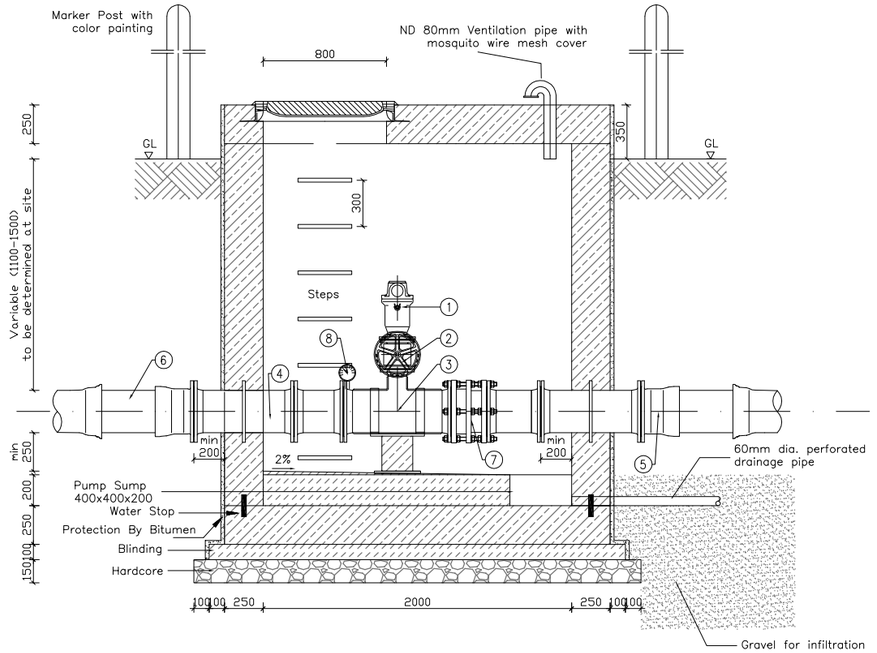

SECTION A–A

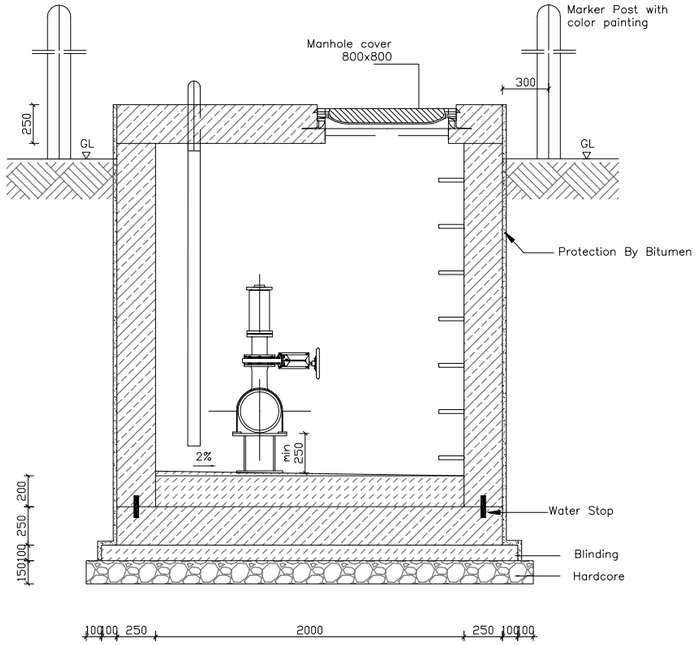

SECTION B–B

NOTES

1. All dimensions are in millimeters unless otherwise stated
2. Only figured dimensions to be taken from this drawing.
3. All reinforced concrete to grade C25
4. All blinding concrete to grate C15
5. All dimensions in this drawing are indicative. The Contractor has to verify all information on this drawing before starting the works. All updated drawings are to be approved by the Engineer. Regarding the underground infrastructure, the Contractor has the full responsibility to get all necessary information and permissions from the concerning company.

LEGEND

- Reinforced Concrete
- Mass Concrete
- Hardcore
- Gravel

1. Air Valve
2. Gate Valve, hand operated
3. T–piece
4. FFM Piece with Puddle Flange
5. EU–piece
6. Pipe coupling
7. Dismantling piece
8. Pressure Gauge with welding piece and ball va

EMERGENCY WORKS FOR INCREASE OF WATER AVAILABILITY IN LIKONI

SHORT TERM TECHNICAL ASSISTANCE
MWACHE PROJECT

Client/Employer:
COAST WATER WORKS DEVELOPMENT AGENCY
P.O BOX 90417, 80100, MOMBASA. KENYA

Consulting Engineer:
GKW Consult GmbH
Augustaanlage 67
68165 Mannheim
GERMANY

Subconsultant:
ISEP
Heri Paradise, Suite 8C
Dennis Pritt Road
P.O. BOX 3271,
00200 - GPO, NAIROBI, KENYA

Revisions:

REV.	DATE	REMARKS

SURVEYED BY:
DESIGNED BY: C.O.
DRAWN BY: L.F.F.
CHECKED BY: C.O.
APPROVED BY: J.B.

SCALES:
Not to scale

Drawing Title:
STANDARD DRAWINGS AND MINOR WORKS
AIR VALVE CHAMBER DETAILS

Date: 08/2019
Drg. No. **P.721771/H/1230/K/003/A**
Sheet 29

Gate Valve Chamber – DN150 to DN250

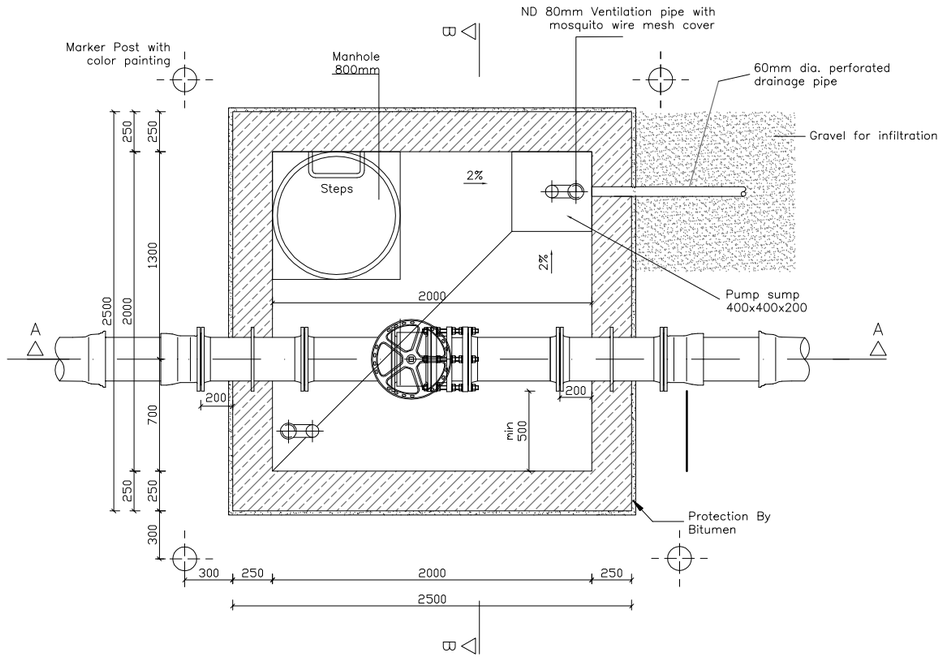

PLAN OF CHAMBER

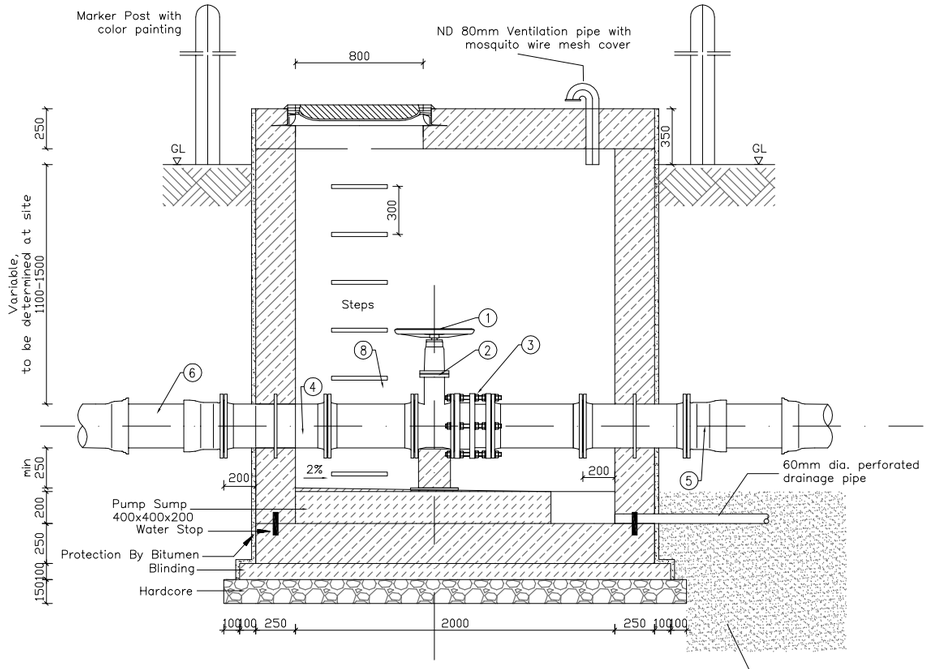

SECTION A–A

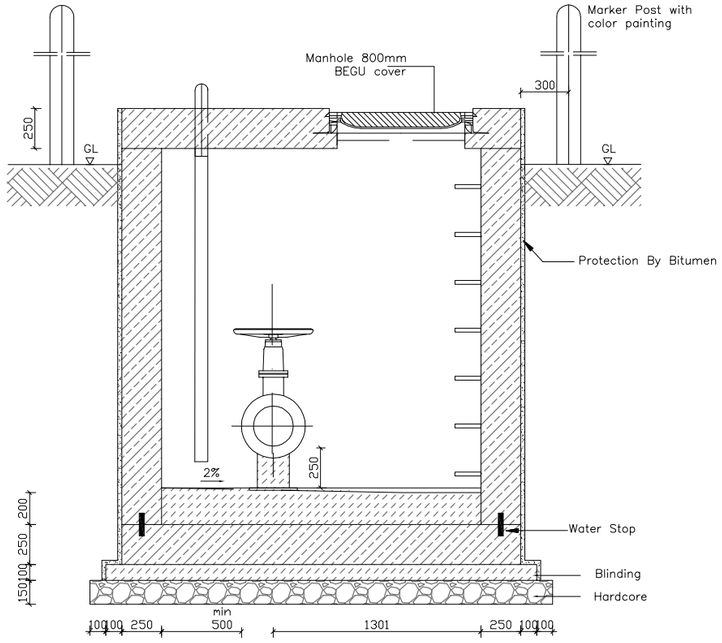

SECTION B–B

NOTES

1. All dimensions are in millimeters unless otherwise stated
2. Only figured dimensions to be taken from this drawing.
3. All reinforced concrete to grade C25
4. All blinding concrete to grate C15
5. All dimensions in this drawing are indicative. The Contractor has to verify all information on this drawing before starting the works. All updated drawings are to be approved by the Engineer. Regarding the underground infrastructure, the Contractor has the full responsibility to get all necessary information and permissions from the concerning company.

LEGEND

- Reinforced Concrete
- Mass Concrete
- Hardcore
- Gravel

1. Steering wheel
2. Gate Valve, hand operated
3. Dismantling joint
4. FFM Piece with Puddle Flange
5. EU–piece
6. Pipe coupling

EMERGENCY WORKS FOR INCREASE OF WATER AVAILABILITY IN LIKONI

SHORT TERM TECHNICAL ASSISTANCE
MWACHE PROJECT

Client/Employer:
COAST WATER WORKS DEVELOPMENT AGENCY
P.O BOX 90417, 80100, MOMBASA. KENYA

Consulting Engineer:
GKW Consult GmbH
Augustaanlage 67
68165 Mannheim
GERMANY

Subconsultant:
ISEP
Heri Paradise, Suite 8C
Dennis Pritt Road
P.O. BOX 3271,
00200 - GPO, NAIROBI, KENYA

Revisions:

REV.	DATE	REMARKS

SURVEYED BY:
DESIGNED BY: C.O.
DRAWN BY: L.F.F.
CHECKED BY: C.O.
APPROVED BY: J.B.

SCALES:
Not to scale

Drawing Title:
STANDARD DRAWINGS AND MINOR WORKS
GATE VALVE CHAMBER DETAILS

Date: 08/2019
Drg. No. **P.721771/H/1230/K/005/A**
Sheet 30

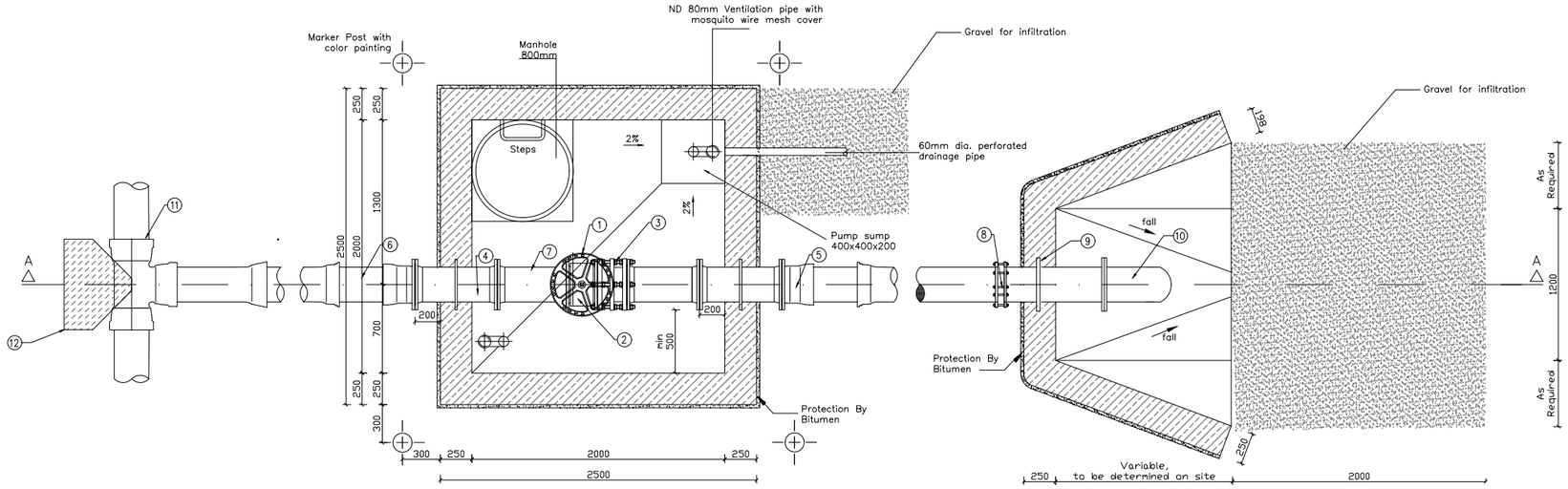

PLAN OF WASHOUT TYPE 1

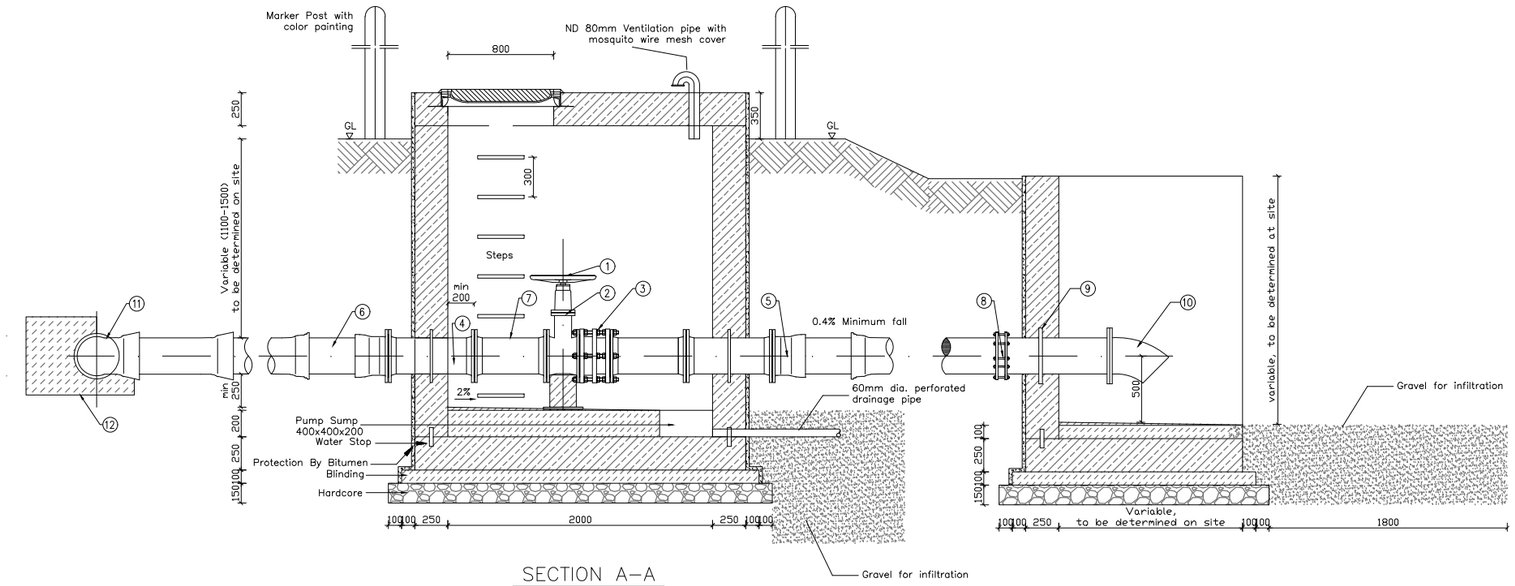

SECTION A–A

WASHOUT TYPE 1

NOTES

1. All dimensions are in millimeters unless otherwise stated
2. Only figured dimensions to be taken from this drawing.
3. All reinforced concrete to grade C25
4. All blinding concrete to grate C15
5. All dimensions in this drawing are indicative. The Contractor has to verify all information on this drawing before starting the works. All updated drawings are to be approved by the Engineer. Regarding the underground infrastructure, the Contractor has the full responsibility to get all necessary information and permissions from the concerning company.

LEGEND

- Reinforced Concrete
- Mass Concrete
- Hardcore
- Gravel

1. Steering wheel
2. Gate Valve, hand operated
3. Dismantling joint
4. FFM Piece with Puddle Flange
5. EU–piece
6. Pipe coupling
7. FF–piece
8. Flanged coupling
9. F–piece with puddle flange
10. 45 deg. open end bend
11. Double socketed branch Tee
12. Thrust block for tee
13. Double flanged tee

TABELE OF WASHOUT BRACH SIZES

MAIN DIAMETER (MM)	WASHOUT BRANCH SIZE (MM)
100 – 300	80
350 – 500	100
600 – 700	150
ABOVE 700	200

EMERGENCY WORKS FOR INCREASE OF WATER AVAILABILITY IN LIKONI

SHORT TERM TECHNICAL ASSISTANCE
MWACHE PROJECT

Client/Employer:
COAST WATER WORKS DEVELOPMENT AGENCY
P.O BOX 90417, 80100, MOMBASA. KENYA

Consulting Engineer:
GKW Consult GmbH
Augustaanlage 67
68165 Mannheim
GERMANY

Subconsultant:
ISEP
Heri Paradise, Suite 8C
Dennis Pritt Road
P.O. BOX 3271,
00200 - GPO, NAIROBI, KENYA

Revisions:

REV.	DATE	REMARKS

SURVEYED BY:
DESIGNED BY: C.O.
DRAWN BY: L.F.F.
CHECKED BY: C.O.
APPROVED BY: J.B.

SCALES:
Not to scale

Drawing Title:
STANDARD DRAWINGS AND MINOR WORKS
WASH OUT VALVES CHAMBER DETAILS TYPE 1

Date: 08/2019
Drg. No. **P.721771/H/1230/K/007/A**
Sheet 31

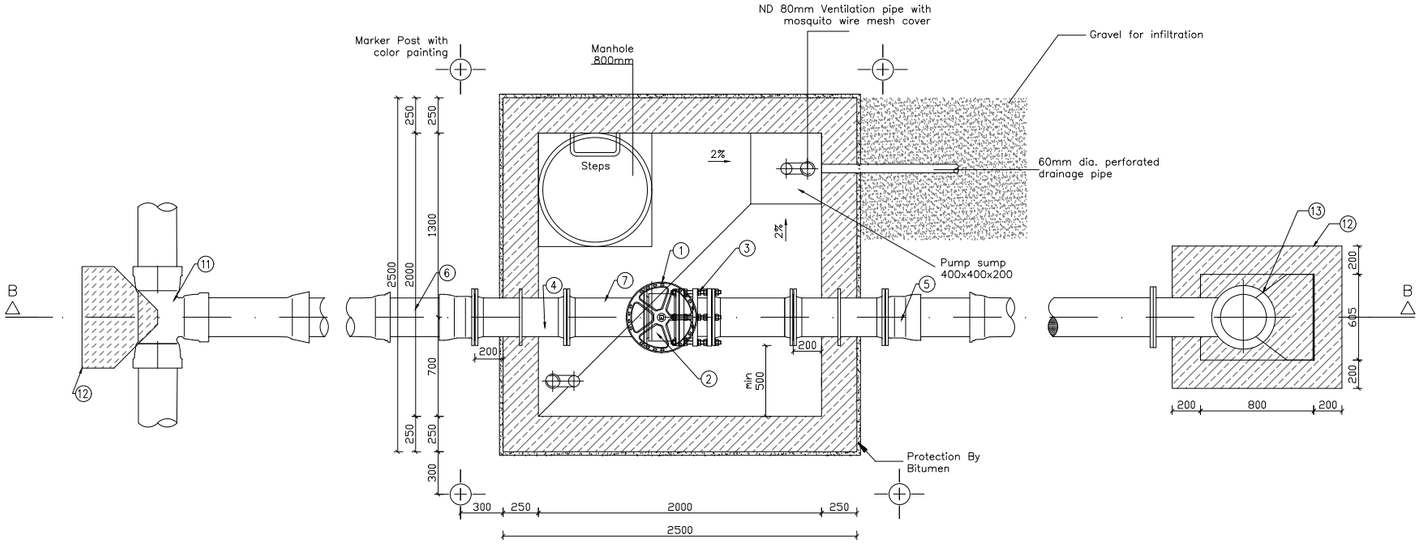

PLAN OF WASH OUT TYPE 2

NOTES

1. All dimensions are in millimeters unless otherwise stated
2. Only figured dimensions to be taken from this drawing.
3. All reinforced concrete to grade C25
4. All blinding concrete to grate C15
5. All dimensions in this drawing are indicative. The Contractor has to verify all information on this drawing before starting the works. All updated drawings are to be approved by the Engineer. Regarding the underground infrastructure, the Contractor has the full responsibility to get all necessary information and permissions from the concerning company.

LEGEND

- Reinforced Concrete
- Mass Concrete
- Hardcore
- Gravel

1. Steering wheel
2. Gate Valve, hand operated
3. Dismantling joint
4. FFM Piece with Puddle Flange
5. EU–piece
6. Pipe coupling
7. FF–piece
8. Flanged coupling
9. F–piece with puddle flange
10. 45 deg. open end bend
11. Double socketed branch Tee
12. Thrust block for tee
13. Double flanged tee

TABELE OF WASHOUT BRACH SIZES

MAIN DIAMETER (MM)	WASHOUT BRANCH SIZE (MM)
100 – 300	80
350 – 500	100
600 – 700	150
ABOVE 700	200

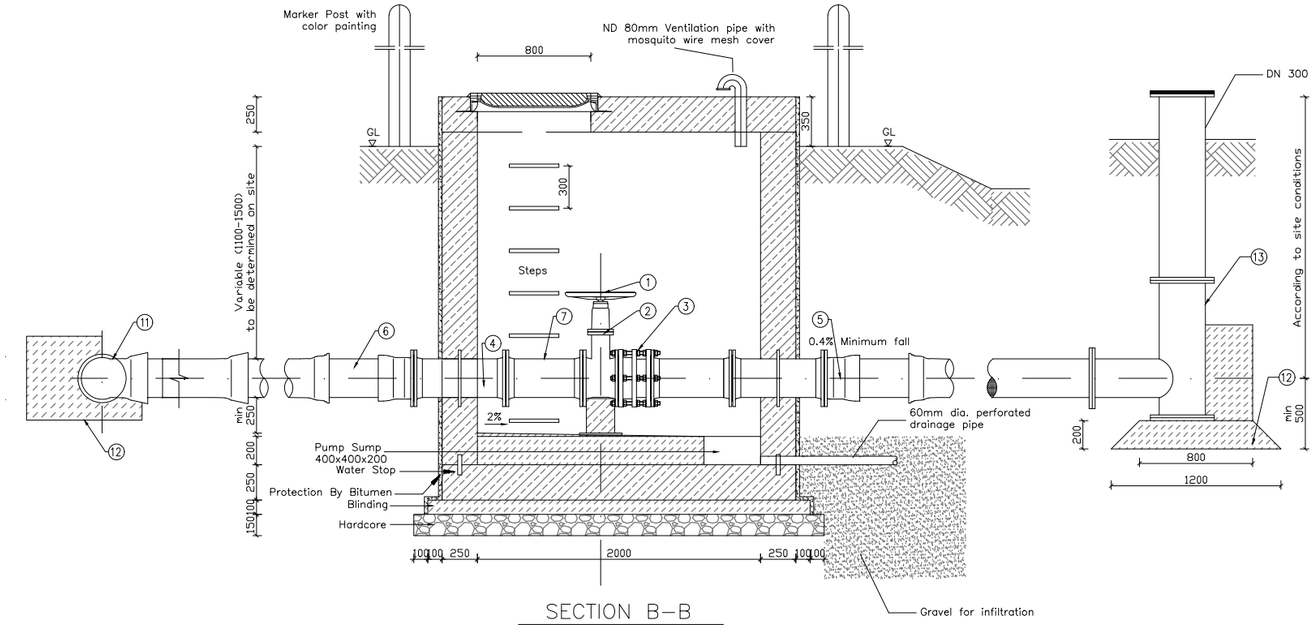

SECTION B–B

WASHOUT TYPE 2

EMERGENCY WORKS FOR INCREASE OF WATER AVAILABILITY IN LIKONI

SHORT TERM TECHNICAL ASSISTANCE
MWACHE PROJECT

Client/Employer:
COAST WATER WORKS DEVELOPMENT AGENCY
P.O BOX 90417, 80100, MOMBASA. KENYA

Consulting Engineer:
GKW Consult GmbH
Augustaanlage 67
68165 Mannheim
GERMANY

Subconsultant:
ISEP
Heri Paradise, Suite 8C
Dennis Pritt Road
P.O. BOX 3271,
00200 - GPO, NAIROBI, KENYA

Revisions:

REV.	DATE	REMARKS

SURVEYED BY:
DESIGNED BY: C.O.
DRAWN BY: L.F.F.
CHECKED BY: C.O.
APPROVED BY: J.B.

SCALES:
Not to scale

Drawing Title:
STANDARD DRAWINGS AND MINOR WORKS
WASH OUT VALVES CHAMBER DETAILS TYPE 2

Date: 08/2019
Drg. No. **P.721771/H/1230/K/008/A**
Sheet 32

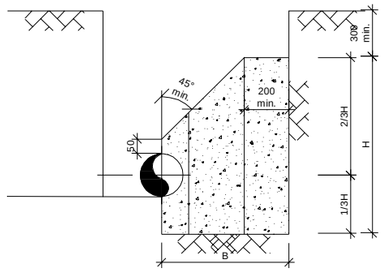

SECTION A-A

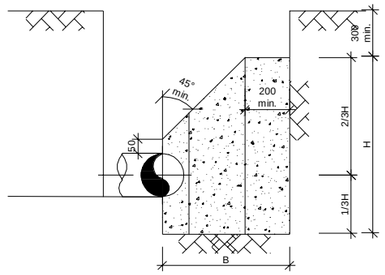

SECTION B-B

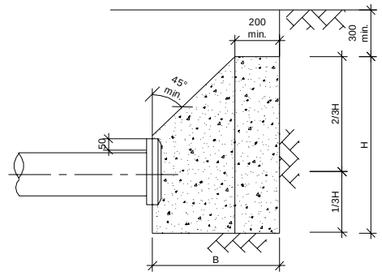

SECTION C-C

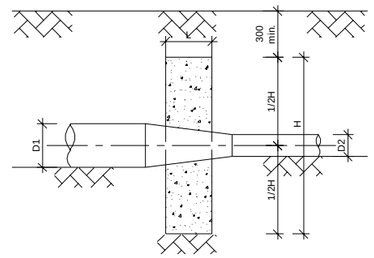

SECTION D-D

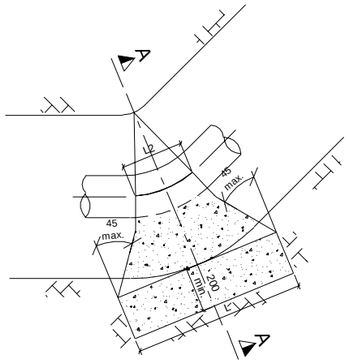

SECTIONAL PLAN
HORIZONTAL BENDS

SCALE 1:20

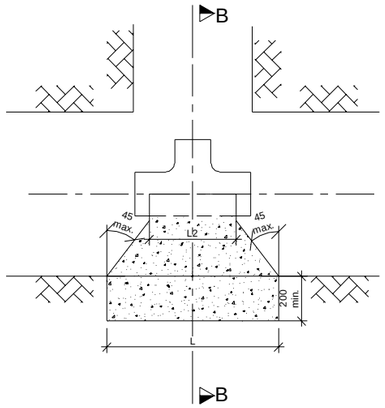

SECTIONAL PLAN
TEES

SCALE 1:20

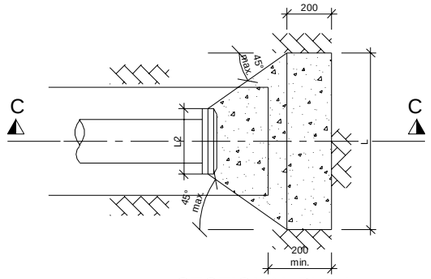

SECTIONAL PLAN
END CAPS

SCALE 1:20

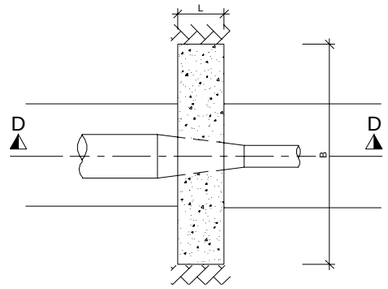

SECTIONAL PLAN
REDUCERS

SCALE 1:20

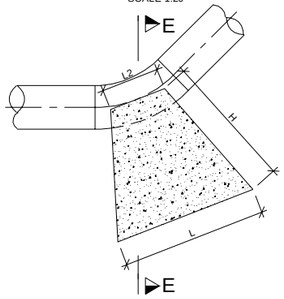

ELEVATION

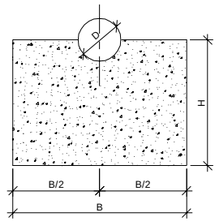

SECTION E-E

VERTICAL ANCHOR BLOCKS AT DEPRESSIONS

SCALE 1:20

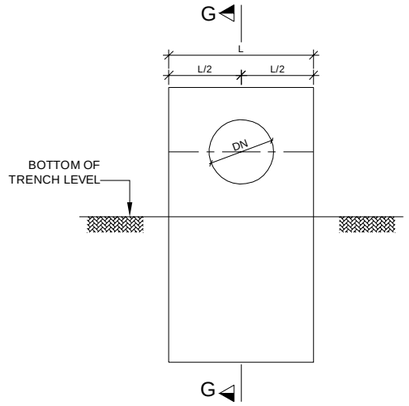

FRONT VIEW

SCALE 1:20

DETAIL OF PIPE SUPPORT BLOCK

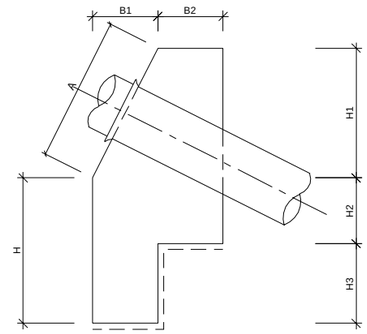

SECTION G-G
ANCHOR BLOCKS ON GRADIENTS

SCALE 1:20

GRADIENT	SPACING OF ANCHOR BLOCKS (m)
1 IN 2	5.5
1 IN 3	11.0
1 IN 4	11.0
1 IN 5	16.5
1 IN 6	22.0
1 IN 7 - 10	27.5

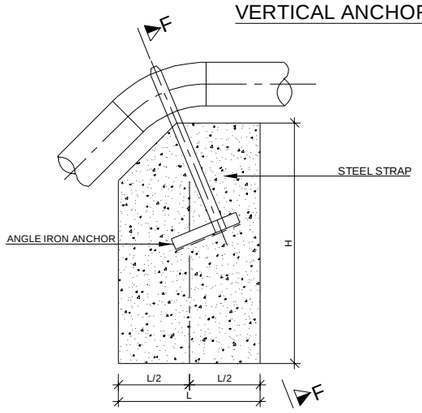

ELEVATION

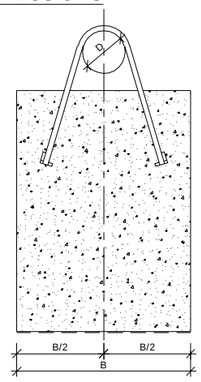

SECTION F-F

VERTICAL ANCHOR BLOCKS AT CRESTS

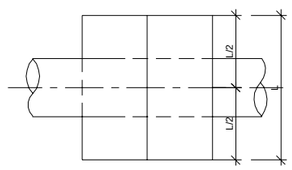

SECTIONAL PLAN

SCALE 1:20

NOTE

ANCHOR BLOCK TO BE POSITIONED BEHIND COLLAR AS SHOWN

PIPE DIAMETER DN (mm)	DIMENSIONS (m)							
	A	L	H	H1	H2	H3	B1	B2
200	0.8	0.8	0.8	0.7	0.35	0.45	0.35	0.35
300	0.9	1.0	1.0	0.8	0.4	0.6	0.4	0.4
400	1.0	1.0	1.0	0.9	0.45	0.55	0.45	0.45
500	1.1	1.2	1.2	1.0	0.5	0.7	0.5	0.5
600	1.2	1.2	1.2	1.1	0.55	0.65	0.55	0.55
800	1.4	1.4	1.4	1.3	0.65	0.75	0.65	0.65

NOTES

ALL DIMENSIONS ARE IN MILLIMETERS UNLESS STATED OTHERWISE.

ANCHOR BLOCKS TO BE CONSTRUCTED FROM UNREINFORED CONCRETE CLASS 20

CONCRETE TO BE CAST AGAINST UNDISTURBED GROUND. WHERE DISTURBED, THE SOIL AROUND THE ANCHOR BLOCK TO BE REMOVED AND FILLED WITH CONCRETE BEFORE THE PIPE IS PRESSURE TESTED OR COMPACTED TO NOT LESS THAN 95% MAX. DRY DENSITY BEFORE THE MAIN IS PRESSURE TESTED.

BENDS LESS THAN 6° TO BE TAKEN UP BY THE FLEXIBLE PIPE JOINTS WHERE PRACTICABLE.

11¼° BENDS TO BE USED FOR BENDS GREATER THAN OR EQUAL TO 6° AND LESS THAN OR EQUAL TO 16°.

ALL ANCHOR BLOCKS TO BE CAST LEAVING ALL PIPE JOINTS FREE.

DIAMETERS GIVEN ON THE TABLES ARE PIPE NOMINAL BORE SIZES.

REFER TO SHEET 2 FOR TABLES OF DIMENSIONS FOR ANCHOR BLOCKS.

ALL BENDS, TAPERS AND TEES TO BE WRAPPED WITH POLYTHENE SHEET GAUGE 500.

ALL DIMENSIONS IN THIS DRAWING ARE INDICATIVE. THE CONTRACTOR HAS TO VERIFY ALL INFORMATION ON THIS DRAWING BEFORE STARTING THE WORKS. ALL UPDATED DRAWINGS ARE TO BE APPROVED BY THE ENGINEER. REGARDING THE UNDERGROUND INFRASTRUCTURE, THE CONTRACTOR HAS THE FULL RESPONSIBILITY TO GET ALL THE NECESSARY INFORMATION AND PERMISSIONS FROM THE CONCERNING COMPANIES.

EMERGENCY WORKS FOR INCREASE OF WATER AVAILABILITY IN LIKONI

SHORT TERM TECHNICAL ASSISTANCE
MWACHE PROJECT

Client/Employer:
COAST WATER WORKS DEVELOPMENT AGENCY
P.O BOX 90417, 80100, MOMBASA. KENYA

Consulting Engineer:
GKW Consult GmbH
Augustaanlage 67
68165 Mannheim
GERMANY

Subconsultant:
ISEP
Heri Paradise, Suite 8C
Dennis Pritt Road
P.O. BOX 3271,
00200 - GPO, NAIROBI, KENYA

Revisions:

REV.	DATE	REMARKS

SURVEYED BY:
DESIGNED BY: C.O.
DRAWN BY: O.M.O.
CHECKED BY: C.O.
APPROVED BY: J.B..

SCALES:
Not to scale

Drawing Title:

STANDARD DRAWINGS AND MINOR WORKS

THRUST BLOCK DETAILS
SHEET 1 of 2

Date: 08/2019

Drg. No. **1230/K/009/A**

Sheet 33

VERTICAL BENDS (TYPE DV) - DEPRESSIONS (dimensions in metres)

Pipe Diameter	Test Pressure	45 deg					22.5 deg					11.25 deg				
		H	L	B	L2	Vol	H	L	B	L2	Vol	H	L	B	L2	Vol
(mm)	(m)	(m)	(m)	(m)	(m)	(m^3)	(m)	(m)	(m)	(m)	(m^3)	(m)	(m)	(m)	(m)	(m^3)
80	90	0.50	0.40	0.30	0.10	0.04	0.50	0.40	0.30	0.10	0.04	0.50	0.40	0.20	0.10	0.03
	150	0.50	0.40	0.30	0.10	0.04	0.50	0.40	0.30	0.10	0.04	0.50	0.40	0.20	0.10	0.03
	240	0.50	0.40	0.30	0.10	0.04	0.50	0.40	0.30	0.10	0.04	0.50	0.40	0.20	0.10	0.03
100	90	0.50	0.40	0.30	0.15	0.05	0.50	0.40	0.30	0.10	0.04	0.50	0.40	0.20	0.10	0.03
	150	0.50	0.40	0.30	0.15	0.05	0.50	0.40	0.30	0.10	0.04	0.50	0.40	0.20	0.10	0.03
	240	0.50	0.40	0.30	0.15	0.05	0.50	0.40	0.30	0.10	0.04	0.50	0.40	0.20	0.10	0.03
150	90	0.55	0.60	0.30	0.30	0.08	0.55	0.40	0.30	0.14	0.05	0.55	0.40	0.30	0.13	0.05
	150	0.55	0.70	0.40	0.30	0.11	0.55	0.50	0.30	0.14	0.06	0.55	0.50	0.30	0.13	0.06
	240	0.55	0.80	0.40	0.30	0.13	0.55	0.70	0.30	0.14	0.07	0.55	0.50	0.30	0.13	0.06
200	90	0.60	0.80	0.40	0.35	0.14	0.60	0.70	0.30	0.14	0.08	0.60	0.50	0.30	0.13	0.06
	150	0.60	0.90	0.40	0.35	0.15	0.60	0.70	0.30	0.14	0.08	0.60	0.50	0.30	0.13	0.06
	240	0.60	1.10	0.60	0.35	0.27	0.60	0.80	0.40	0.14	0.12	0.60	0.60	0.40	0.13	0.09
250	90	0.65	0.80	0.50	0.40	0.20	0.65	0.70	0.40	0.15	0.12	0.65	0.60	0.40	0.14	0.10
	150	0.65	1.00	0.70	0.40	0.32	0.65	0.80	0.50	0.15	0.16	0.65	0.60	0.40	0.14	0.10
	240	0.65	1.20	0.70	0.40	0.37	0.65	1.00	0.50	0.15	0.19	0.65	0.70	0.50	0.14	0.14

VERTICAL BENDS (TYPE CV) - CREST (dimensions in metres)

Pipe Diameter	Test Pressure	45 deg					22.5 deg					11.25 deg				
		H	L	B	Strap	Vol	H	L	B	Strap	Vol	H	L	B	Strap	Vol
(mm)	(m)	(m)	(m)	(m)	(mm)	(m^3)	(m)	(m)	(m)	(mm)	(m^3)	(m)	(m)	(m)	(mm)	(m^3)
80	90	0.60	0.80	0.70	30x4	0.28	0.50	0.50	0.50	30x4	0.12	0.40	0.40	0.40	30x4	0.07
	150	0.80	0.90	0.70	30x4	0.44	0.60	0.70	0.50	30x4	0.20	0.50	0.50	0.40	30x4	0.10
	240	0.90	1.20	0.80	30x4	0.72	0.60	0.90	0.50	30x4	0.34	0.60	0.70	0.40	30x4	0.17
100	90	0.80	1.00	0.70	30x4	0.55	0.60	0.80	0.70	30x4	0.24	0.40	0.50	0.70	30x4	0.14
	150	0.80	1.20	0.70	30x4	0.65	0.80	0.80	0.70	30x4	0.43	0.60	0.60	0.70	30x4	0.25
	240	0.90	1.40	0.80	30x4	0.82	0.80	1.20	0.70	30x4	0.62	0.70	0.70	0.70	30x4	0.34
150	90	0.80	1.20	1.00	30x4	0.78	0.70	0.90	0.80	30x4	0.48	0.60	0.70	0.70	30x4	0.29
	150	0.80	1.50	1.10	30x4	1.02	0.80	1.10	0.80	30x4	0.66	0.70	1.00	0.70	30x4	0.40
	240	0.80	1.70	1.10	30x4	1.10	0.80	1.30	0.90	30x4	0.86	0.80	1.00	0.80	30x4	0.53
200	90	0.80	1.60	1.40	40x4	1.35	0.70	1.50	0.90	30x4	0.85	0.60	1.00	0.80	30x4	0.47
	150	0.95	1.80	1.60	40x4	2.09	0.90	1.50	1.20	30x4	1.49	0.70	1.20	1.00	30x4	0.81
	240	1.00	2.00	2.00	40x6	3.00	1.00	1.80	1.60	30x4	2.35	0.80	1.40	1.20	30x4	1.29
250	90	1.10	1.60	1.20	40x4	1.73	0.80	1.30	1.10	30x4	1.05	0.60	1.20	0.90	30x4	0.62
	150	1.30	1.80	1.40	40x6	2.71	0.80	1.60	1.30	30x4	1.50	0.90	1.20	1.00	30x4	1.05
	240	1.30	2.20	1.80	60x6	4.06	1.00	1.70	1.60	40x6	2.49	0.90	1.50	1.20	40x4	1.56
300	90	1.20	1.80	1.40	60x6	2.46	1.00	1.50	1.20	60x4	1.67	0.80	1.20	1.00	60x4	0.93
	150	1.40	2.20	1.60	60x6	3.96	1.00	1.70	1.40	60x4	2.18	1.00	1.50	1.20	60x4	1.74
	240	1.60	2.50	2.20	100x6	7.09	1.20	2.00	1.80	80x4	3.95	1.00	1.70	1.20	60x4	1.96

REDUCERS- TYPE RD
(dimensions in metres)

Pipe Diameter	Test Pressure				
		L	B	H	Vol
(mm)	(m)	(m)	(m)	(m)	(m^3)
100/80	90	0.35	0.50	0.40	0.07
	150	0.35	0.55	0.45	0.09
	240	0.35	0.60	0.55	0.12
150/80	90	0.40	0.50	0.40	0.08
	150	0.40	0.60	0.40	0.10
	240	0.40	0.75	0.55	0.17
150/100	90	0.40	0.50	0.40	0.08
	150	0.40	0.60	0.40	0.10
	240	0.40	0.70	0.45	0.13
200/100	90	0.40	0.70	0.50	0.14
	150	0.40	0.80	0.70	0.22
	240	0.40	1.00	0.80	0.32
200/150	90	0.40	0.60	0.40	0.09
	150	0.40	0.65	0.40	0.10
	240	0.40	0.75	0.50	0.15
250/100	90	0.40	0.80	0.60	0.18
	150	0.40	0.90	0.70	0.24
	240	0.40	1.00	0.80	0.31
250/150	90	0.40	0.80	0.60	0.18
	150	0.40	0.85	0.70	0.23
	240	0.40	0.95	0.85	0.32
250/200	90	0.40	0.70	0.60	0.16
	150	0.40	0.75	0.70	0.20
	240	0.40	0.90	0.80	0.28
300/100	90	0.40	1.00	0.70	0.27
	150	0.40	1.30	0.90	0.46
	240	0.40	1.50	1.00	0.59
300/150	90	0.40	1.00	0.70	0.27
	150	0.40	1.25	0.80	0.39
	240	0.40	1.50	1.00	0.59
300/200	90	0.40	1.00	0.70	0.27
	150	0.40	1.00	0.80	0.31
	240	0.40	1.20	1.00	0.47
300/250	90	0.40	1.00	0.70	0.26
	150	0.40	1.00	0.80	0.30
	240	0.40	1.10	1.00	0.42

HORIZONTAL BENDS - TYPE HB (dimensions in metres)

Pipe Diameter	Test Pressure	90 deg					45 deg					22.5 deg					11.25 deg				
		H	L	B	L2	Vol	H	L	B	L2	Vol	H	L	B	L2	Vol	H	L	B	L2	Vol
(mm)	(m)	(m)	(m)	(m)	(m)	(m^3)	(m)	(m)	(m)	(m)	(m^3)	(m)	(m)	(m)	(m)	(m^3)	(m)	(m)	(m)	(m)	(m^3)
65	90	0.21	0.21	0.55	0.10	0.02	0.15	0.16	0.55	0.10	0.01										
	150	0.27	0.27	0.65	0.10	0.03	0.20	0.20	0.65	0.10	0.02										
	240	0.34	0.34	0.65	0.10	0.06	0.25	0.25	0.65	0.10	0.03	0.18	0.18	0.65	0.10	0.02					
	375	0.42	0.42	0.65	0.10	0.07	0.31	0.31	0.65	0.10	0.04	0.22	0.23	0.65	0.10	0.02					
80	90	0.22	0.23	0.55	0.10	0.02	0.16	0.17	0.55	0.10	0.01										
	150	0.29	0.29	0.65	0.10	0.04	0.21	0.22	0.65	0.10	0.02	0.15	0.16	0.65	0.10	0.01					
	240	0.36	0.37	0.65	0.10	0.06	0.27	0.27	0.65	0.10	0.03	0.19	0.19	0.65	0.10	0.02	0.13	0.14	0.65	0.10	0.01
	375	0.45	0.46	0.65	0.10	0.09	0.33	0.34	0.65	0.10	0.05	0.24	0.24	0.65	0.10	0.03	0.17	0.17	0.65	0.10	0.02
100	90	0.32	0.32	0.60	0.15	0.04	0.23	0.24	0.60	0.15	0.03	0.17	0.17	0.60	0.10	0.01					
	150	0.41	0.41	0.70	0.15	0.08	0.30	0.31	0.70	0.15	0.05	0.21	0.22	0.70	0.10	0.02	0.15	0.15	0.70	0.10	0.01
	240	0.52	0.52	0.70	0.15	0.12	0.38	0.39	0.70	0.15	0.07	0.27	0.28	0.70	0.10	0.04	0.19	0.20	0.70	0.10	0.02
	375	0.65	0.65	0.70	0.15	0.18	0.48	0.48	0.70	0.15	0.18	0.34	0.34	0.70	0.15	0.06	0.24	0.25	0.70	0.10	0.03
150	90	0.48	0.48	0.60	0.30	0.10	0.35	0.35	0.60	0.20	0.05	0.25	0.25	0.60	0.14	0.03	0.18	0.18	0.60	0.13	0.02
	150	0.61	0.62	0.70	0.30	0.17	0.45	0.46	0.70	0.20	0.10	0.32	0.33	0.70	0.14	0.05	0.23	0.23	0.70	0.13	0.03
	240	0.78	0.78	0.70	0.30	0.27	0.57	0.58	0.70	0.20	0.15	0.41	0.41	0.70	0.14	0.08	0.29	0.29	0.70	0.13	0.04
	375	0.97	0.97	0.70	0.30	0.40	0.71	0.72	0.70	0.20	0.22	0.51	0.51	0.70	0.14	0.11	0.36	0.37	0.70	0.13	0.06
200	90	0.63	0.64	0.65	0.35	0.17	0.47	0.47	0.65	0.20	0.09	0.33	0.34	0.65	0.14	0.05	0.24	0.24	0.65	0.13	0.03
	150	0.82	0.82	0.75	0.35	0.31	0.60	0.61	0.75	0.20	0.17	0.43	0.43	0.75	0.14	0.09	0.30	0.31	0.75	0.13	0.05
	240	1.03	1.04	0.75	0.35	0.47	0.76	0.77	0.75	0.20	0.26	0.54	0.55	0.75	0.14	0.13	0.38	0.39	0.75	0.13	0.07
	375	1.05	1.59	0.75	0.35	0.71	0.95	0.96	0.75	0.20	0.39	0.68	0.68	0.75	0.14	0.20	0.48	0.49	0.75	0.13	0.11
250	90	0.79	0.80	0.65	0.40	0.26	0.58	0.59	0.65	0.25	0.13	0.42	0.42	0.65	0.15	0.07	0.29	0.30	0.65	0.14	0.04
	150	1.02	1.03	0.75	0.40	0.46	0.75	0.76	0.75	0.25	0.25	0.54	0.54	0.75	0.15	0.13	0.38	0.39	0.75	0.14	0.07
	240	1.20	1.40	0.75	0.40	0.71	0.95	0.96	0.75	0.25	0.39	0.68	0.68	0.75	0.15	0.20	0.48	0.49	0.75	0.14	0.11
	375	1.09	2.40	0.75	0.40	1.07	1.09	1.30	0.75	0.25	0.59	0.85	0.85	0.75	0.15	0.30	0.60	0.61	0.75	0.14	0.16
300	90	1.00	1.00	0.70	0.40	0.40	0.73	0.74	0.70	0.25	0.22	0.52	0.53	0.70	0.16	0.11	0.37	0.38	0.70	0.15	0.06
	150	1.30	1.28	0.80	0.40	0.73	0.95	0.96	0.80	0.25	0.40	0.68	0.68	0.80	0.16	0.21	0.48	0.48	0.80	0.15	0.11
	240	1.50	1.77	0.80	0.40	1.12	1.19	1.27	0.80	0.25	0.61	0.85	0.86	0.80	0.16	0.32	0.61	0.61	0.80	0.15	0.17
	375	1.80	2.30	0.80	0.40	1.71	1.40	1.60	0.80	0.25	0.93	1.07	1.07	0.80	0.16	0.48	0.76	0.76	0.80	0.15	0.25
350	90	1.12	1.12	0.70	0.50	0.48	0.82	0.83	0.70	0.30	0.26	0.59	0.59	0.70	0.19	0.14	0.42	0.42	0.70	0.17	0.07
	150	1.45	1.44	0.80	0.50	0.89	1.06	1.07	0.80	0.30	0.48	0.76	0.76	0.80	0.19	0.25	0.54	0.54	0.80	0.17	0.13
	240	1.90	2.22	0.80	0.50	1.37	1.20	1.51	0.80	0.30	0.75	0.96	0.96	0.80	0.19	0.39	0.68	0.68	0.80	0.17	0.20
	375	1.80	2.89	0.80	0.50	2.09	1.50	1.88	0.80	0.30	1.14	1.16	1.21	0.80	0.19	0.59	0.85	0.85	0.80	0.17	0.31
400	90	1.20	1.36	0.75	0.50	0.84	0.94	0.94	0.75	0.30	0.35	0.67	0.68	0.75	0.20	0.10	0.48	0.49	0.75	0.18	0.10
	150	1.60	1.70	0.85	0.50	1.18	1.20	1.23	0.85	0.30	0.64	0.87	0.87	0.85	0.20	0.34	0.61	0.62	0.85	0.18	0.18
	240	1.80	2.41	0.85	0.50	1.82	1.50	1.57	0.85	0.30	0.99	1.09	1.10	0.85	0.20	0.51	0.78	0.78	0.85	0.18	0.27
	375	2.00	3.39	0.85	0.50	2.78	1.80	2.04	0.85	0.30	1.51	1.20	1.56	0.85	0.20	0.79	0.97	0.97	0.85	0.18	0.41
450	90	1.24	1.67	0.75	0.50	0.76	1.06	1.06	0.75	0.35	0.42	0.75	0.76	0.75	0.21	0.22	0.53	0.54	0.75	0.19	0.11
	150	1.70	2.02	0.85	0.50	1.42	1.30	1.43	0.85	0.35	0.78	0.97	0.98	0.85	0.21	0.40	0.69	0.69	0.85	0.19	0.21
	240	1.80	3.05	0.85	0.50	2.22	1.50	1.98	0.85	0.35	1.21	1.23	1.23	0.85	0.21	0.62	0.87	0.88	0.85	0.19	0.33
	375	2.50	3.43	0.85	0.50	3.40	2.00	2.32	0.85	0.35	1.88	1.50	1.58	0.85	0.21	0.96	1.09	1.09	0.85	0.19	0.50
500	90	1.50	1.79	0.80	0.70	1.04	1.21	1.21	0.80	0.38	0.56	0.86	0.87	0.80	0.22	0.29	0.61	0.62	0.80	0.20	0.16
	150	1.80	2.49	0.90	0.50	1.89	1.50	1.62	0.90	0.35	1.04	1.11	1.12	0.90	0.21	0.54	0.79	0.79	0.90	0.20	0.28
	240	2.00	3.57	0.90	0.70	2.98	1.80	2.15	0.90	0.38	1.62	1.30	1.52	0.90	0.22	0.64	0.99	1.00	0.90	0.20	0.43
	375	2.50	4.46	0.90	0.70	4.57	2.00	3.02	0.90	0.38	2.48	1.50	2.06	0.90	0.22	1.28	1.24	1.25	0.90	0.20	0.66

TEES AND ENDS - TYPE TY
(dimensions in metres)

Branch Diameter	Test Pressure	Tees and Ends				
		H	L	B	L2	Vol
(mm)	(m)	(m)	(m)	(m)	(m)	(m^3)
65	90	0.17	0.18	0.55	0.07	0.01
	150	0.22	0.23	0.65	0.07	0.02
	240	0.28	0.29	0.65	0.07	0.04
	375	0.35	0.35	0.65	0.07	0.05
80	90	0.19	0.19	0.55	0.08	0.02
	150	0.24	0.25	0.65	0.08	0.03
	240	0.30	0.31	0.65	0.08	0.04
	375	0.36	0.39	0.65	0.08	0.06
100	90	0.27	0.27	0.60	0.10	0.03
	150	0.34	0.35	0.70	0.10	0.06
	240	0.43	0.44	0.70	0.10	0.08
	375	0.54	0.55	0.70	0.10	0.13
150	90	0.40	0.40	0.60	0.15	0.07
	150	0.52	0.52	0.70	0.15	0.12
	240	0.65	0.65	0.70	0.15	0.18
	375	0.81	0.82	0.70	0.15	0.28
200	90	0.53	0.54	0.65	0.20	0.12
	150	0.69	0.69	0.75	0.20	0.22
	240	0.87	0.87	0.75	0.20	0.34
	375	1.05	1.13	0.75	0.02	0.51
250	90	0.67	0.67	0.65	0.25	0.19
	150	0.86	0.88	0.75	0.25	0.33
	240	1.09	1.09	0.75	0.25	0.51
	375	1.20	1.54	0.75	0.25	0.77
300	90	0.84	0.84	0.70	0.30	0.31
	150	1.08	1.09	0.80	0.30	0.54
	240	1.30	1.45	0.80	0.30	0.93
	375	1.50	1.95	0.80	0.30	1.25
350	90	0.94	0.95	0.70	0.35	0.38
	150	1.20	1.23	0.80	0.35	0.67
	240	1.50	1.57	0.80	0.35	1.02
	375	1.80	2.05	0.80	0.35	1.54
400	90	1.07	1.09	0.75	0.40	0.51
	150	1.30	1.48	0.85	0.40	0.90
	240	1.70	1.81	0.85	0.40	1.38
	375	1.80	2.67	0.85	0.40	2.06
450	90	1.21	1.21	0.75	0.40	0.82
	150	1.50	1.62	0.85	0.40	1.09
	240	1.80	2.16	0.85	0.40	1.67
	375	2.00	3.03	0.85	0.40	
500	90	1.30	1.47	0.80	0.50	0.84
	150	1.75	1.81	0.90	0.50	1.49
	240	2.00	2.53	0.90	0.50	2.26
	375	2	3.95	0.9	0.5	3.38

EMERGENCY WORKS FOR INCREASE OF WATER AVAILABILITY IN LIKONI

SHORT TERM TECHNICAL ASSISTANCE
MWACHE PROJECT

Client/Employer:
COAST WATER WORKS DEVELOPMENT AGENCY
P.O BOX 90417, 80100, MOMBASA. KENYA

Consulting Engineer:
GKW Consult GmbH
Augustaanlage 67
68165 Mannheim
GERMANY

Subconsultant:
ISEP
Heri Paradise, Suite 8C
Dennis Pritt Road
P.O. BOX 3271,
00200 - GPO, NAIROBI, KENYA

Revisions:

REV.	DATE	REMARKS

SURVEYED BY:
DESIGNED BY: C.O.
DRAWN BY: O.M.O.
CHECKED BY: C.O.
APPROVED BY: J.B.

Drawing Title:
STANDARD DRAWINGS AND MINOR WORKS
THRUST BLOCK DETAILS
SHEET 2 of 2

Date: 08/2019
Drg. No. **1230/K/010/A**
Sheet 34

Open Terrain
Normal Soil

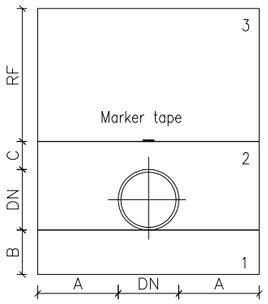

Open Terrain
Poor Soil/ground water

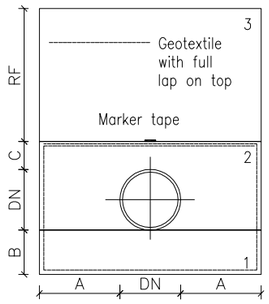

Parallel pipe laying

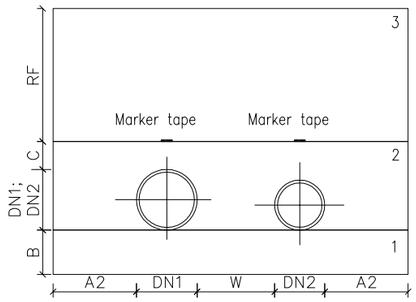

Surfaced district road
crossing

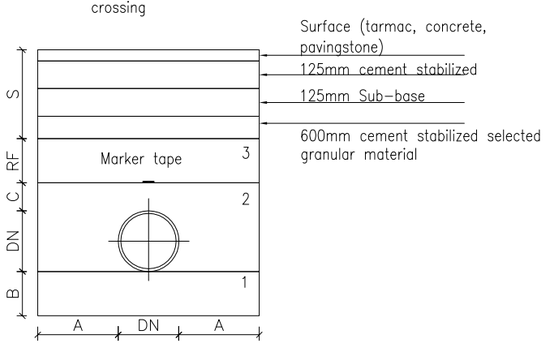

Un-surfaced district road
crossing

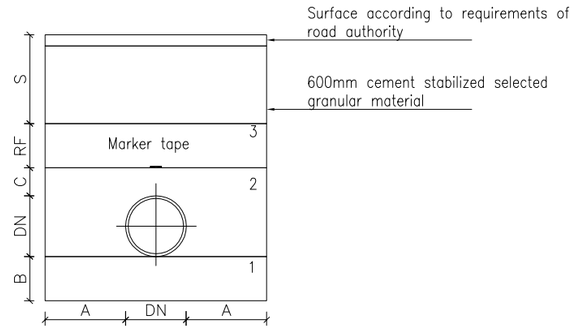

Material classification

1: approved pipe bedding material "SW" according to ASTM D-2487
2: approved pipe bedding material "SP" according to ASTM D-2487
3: approved and sieved (excavation) material

Marker tape:
For plastic pipes: metal tracing tape

Parameter	Ground TL minus pipe TL (S+RF+C)		Bottom trench width 2*A + DN	Bedding B in normal soil	Bedding B in rock	Bedding C DCI+Steel	Bedding C Plastic
Unit	m		m	m	m	m	m
Pipe DN (m)							
0.15		< 1.5	0.70	0.12	0.15	0.20	0.30
	>= 1.5	< 3.7	0.80				
	>= 3.7		0.90				
0.20		< 1.5	0.70	0.12	0.15		
	>= 1.5	< 3.7	0.80				
	>= 3.7		0.90				
0.25	0.0	< 1.5	0.70	0.13	0.15		
	>= 1.5	< 3.7	0.80				
	>= 3.7		0.90				
0.30		< 1.5	0.70	0.13	0.16		
	>= 1.5	< 3.7	0.80				
	>= 3.7		0.90				
0.40			1.00	0.14	0.18		
0.50			1.10	0.15	0.20		
0.60			1.20	0.16	0.22		
0.70			1.30	0.17	0.24		
0.80			1.60	0.18	0.26		

Parameter		Ground TL minus pipe TL (S+RF+C)		Bottom trench width A1+DN1+W+DN2+A2	Bedding B in normal soil	Bedding B in rock	Bedding C DCI+Steel	Bedding C Plastic
Unit		m		m	m	m	m	m
Pipe DN1 (m)	Pipe DN2 (m)							
0.15	0.15		< 1.5	1.15	0.12	0.15	0.20	0.30
		>= 1.5	< 3.7	1.25				
		>= 3.7		1.35				
0.20	0.20		< 1.5	1.20	0.12	0.15		
		>= 1.5	< 3.7	1.30				
		>= 3.7		1.40				
0.25	0.20		< 1.5	1.25	0.13	0.15		
		>= 1.5	< 3.7	1.35				
		>= 3.7		1.45				
0.25	0.25		< 1.5	1.25	0.13	0.15		
		>= 1.5	< 3.7	1.35				
		>= 3.7		1.45				
0.30	0.20		< 1.5	1.25	0.13	0.16		
		>= 1.5	< 3.7	1.35				
		>= 3.7		1.45				
0.40	0.25		< 1.5	1.50	0.14	0.18		
		>= 1.5	< 3.7	1.55				
		>= 3.7		1.60				
0.40	0.40	>= 0.0		1.70	0.18	0.26		
0.80	0.25		< 3.7	2.05	0.18	0.26		
		>= 3.7		2.10				

NOTES

1. All dimensions are in mm unless otherwise stated
2. All pipes to be laid with a minimum cover of 1m and minimum slope of 1: 500.
3. Trench side slope to be at contractors discretion depending on stability of excavated surfaces and ensuring safety of labour at work. However site to be measured based on nominal trench width.
4. Granular material to be approved by the engineer and shall not have any grains of size greater than 10mm and fines less than 0.05mm
5. For purposes of trench Backfilling all excavated trenches with coral material at the bed shall be considered as rock

EMERGENCY WORKS FOR INCREASE OF WATER AVAILABILITY IN LIKONI

SHORT TERM TECHNICAL ASSISTANCE
MWACHE PROJECT

Client/Employer:
COAST WATER WORKS DEVELOPMENT AGENCY
P.O BOX 90417, 80100, MOMBASA. KENYA

Consulting Engineer:
GKW Consult GmbH
Augustaanlage 67
68165 Mannheim
GERMANY

Subconsultant:
ISEP
Heri Paradise, Suite 8C
Dennis Pritt Road
P.O. BOX 3271,
00200 - GPO, NAIROBI, KENYA

Revisions:

REV.	DATE	REMARKS

SURVEYED BY:
DESIGNED BY: C.O.
DRAWN BY: H.A.
CHECKED BY: C.O.
APPROVED BY: J.B.

SCALES:
Not to scale

Drawing Title:
STANDARD DRAWINGS AND MINOR WORKS
PIPE BEDDING DETAILS

Date: 08/2019
Drg. No. **P.721771/H/1230/K/011/A**
Sheet 35

NOTES
1. All dimensions are in millimetres unless otherwise stated
2. Only figured dimensions to be taken from this drawing.
3. Drawing to scale only in A1 size.
4. All reinforced concrete to grade C25
5. All blinding concrete to grade C15
6. Project Sign Boards to be erected at locations indicated by the Enginner
7. Each RH section to be provided with Angle section support

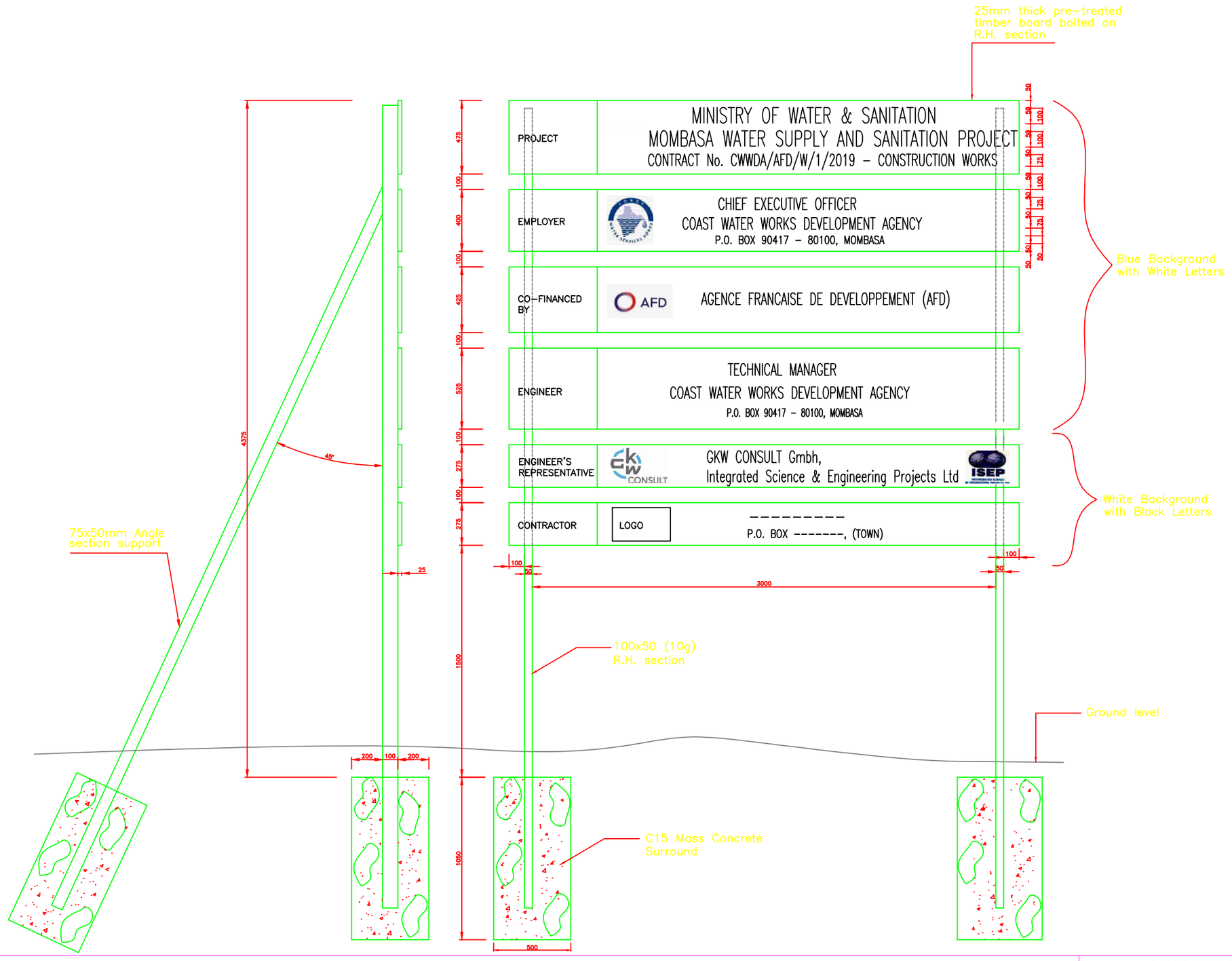

EMERGENCY WORKS FOR INCREASE OF WATER AVAILABILITY IN LIKONI

SHORT TERM TECHNICAL ASSISTANCE
MWACHE PROJECT

Client/Employer:
COAST WATER WORKS DEVELOPMENT AGENCY
P.O BOX 90417, 80100, MOMBASA. KENYA

Consulting Engineer:
GKW Consult GmbH
Augustaanlage 67
68165 Mannheim
GERMANY

Subconsultant:
ISEP
Heri Paradise, Suite 8C
Dennis Pritt Road
P.O. BOX 3271,
00200 - GPO, NAIROBI, KENYA

Revisions:

REV.	DATE	REMARKS

Notes:
AS ABOVE

SURVEYED BY:
DESIGNED BY: O.M.O.
DRAWN BY: O.M.O.
CHECKED BY: C.O.W.
APPROVED BY: C.O.W.
SCALES: 1/20
A3

Drawing Title:
STANDARD DRAWINGS AND MINOR WORKS
PROJECT PUBLICITY BOARD - CWWDA

Date: 07/2019
Drg. No. **1230/K/013/A**
Sheet 39

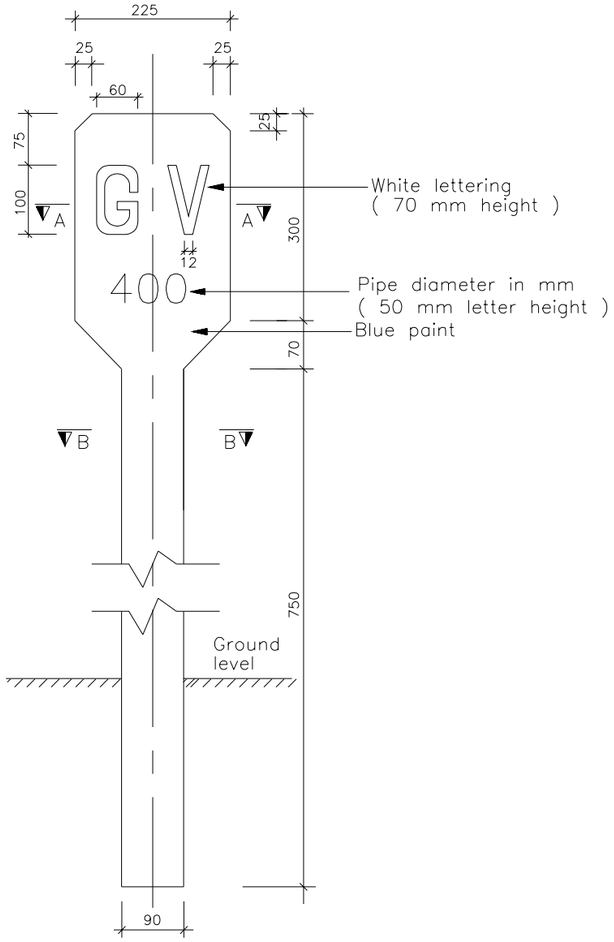

GATE VALVE INDICATOR POST

SCALE N.T.S

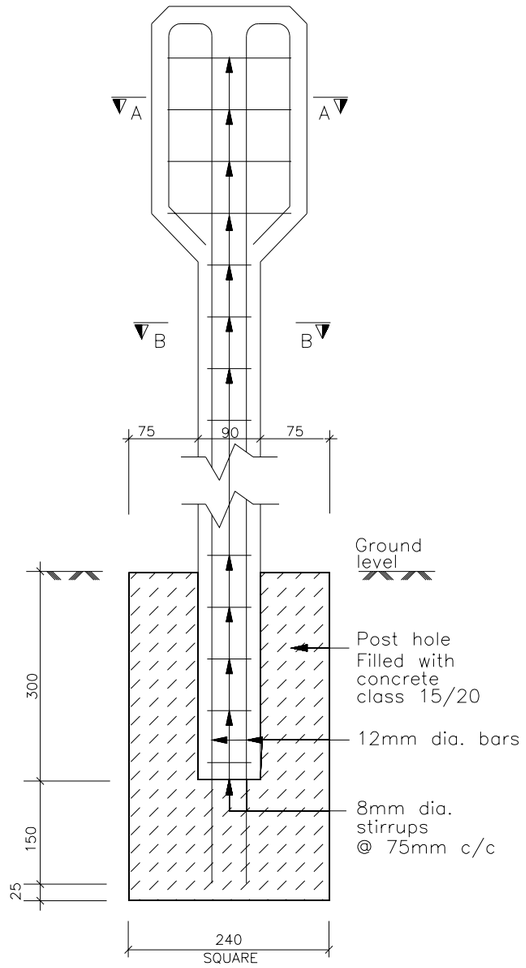

INDICATOR POST REINFORCEMENT

DETAILS

SCALE N.T.S.

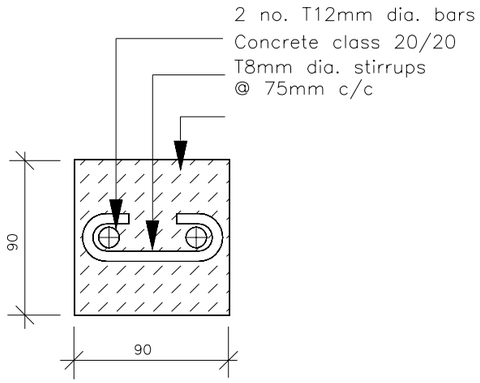

SECTION B–B

SCALE 1:4

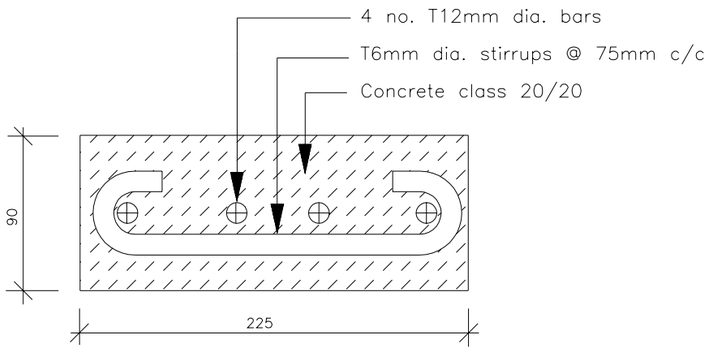

SECTION A–A

SCALE N.T.S

NOTES

1. All dimensions are in mm unless otherwise stated.

2. Details for indicator posts to be as for gate valve but lettering to be as follows

FOR	USE
gate valve	GV
air valve	AV
washout	WO
fire hydrant	H
water main	WM
bulk meter	M

3. All indicator posts except fire Hydrant posts to be painted with 2 coats blue oil based paint and lettering to engineer's approval.

4. Maker posts to be positioned in safe locations where possible against boundary of road reserve

All dimensions in this drawing are indicative. The Contractor has to verify all information on this drawing before starting the works. All updated drawings are to be approved by the Engineer. Regarding the underground infrastructure, the Contractor has the full responsibility to get all necessary information and permissions from the concerning company.

Mass concrete

EMERGENCY WORKS FOR INCREASE OF WATER AVAILABILITY IN LIKONI

SHORT TERM TECHNICAL ASSISTANCE
MWACHE PROJECT

Client/Employer:
COAST WATER WORKS DEVELOPMENT AGENCY
P.O BOX 90417, 80100, MOMBASA. KENYA

Consulting Engineer:
GKW Consult GmbH
Augustaanlage 67
68165 Mannheim
GERMANY

Subconsultant:
ISEP
Heri Paradise, Suite 8C
Dennis Pritt Road
P.O. BOX 3271,
00200 - GPO, NAIROBI, KENYA

Revisions:

REV.	DATE	REMARKS

SURVEYED BY:
DESIGNED BY: C.O.
DRAWN BY: O.M.O.
CHECKED BY: C.O.
APPROVED BY: J.B.

SCALES:
Not to scale

Drawing Title:
STANDARD DRAWINGS AND MINOR WORKS
PIPELINE MARKER POSTS DETAILS

Date: 08/2019
Drg. No. **P.721771/H/1230/K/014/A**
Sheet 37

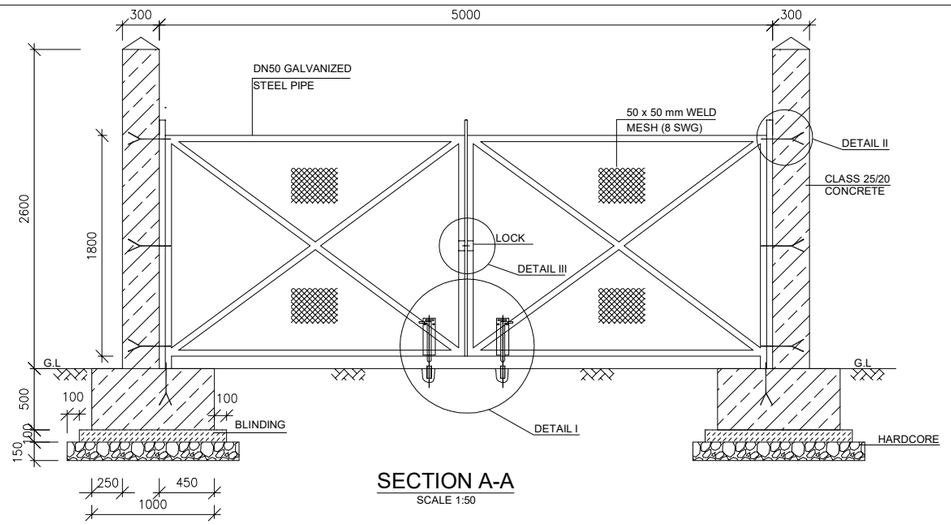

SECTION A-A
SCALE 1:50

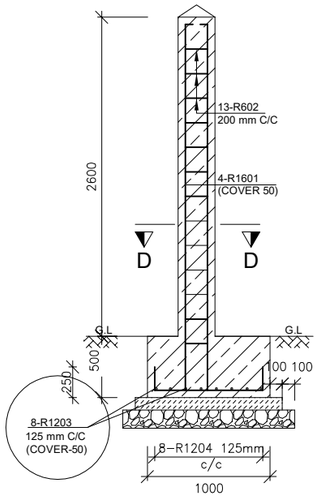

GATE POST
TO ENTRANCE GATE
SCALE 1:50

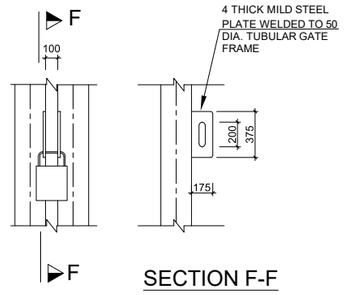

SECTION F-F

MAIN GATE LOCKING
DETAIL III
SCALE 1:5

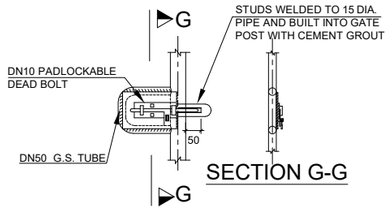

SECTION G-G

SIDE GATE LOCKING
DETAIL IV
SCALE 1:10

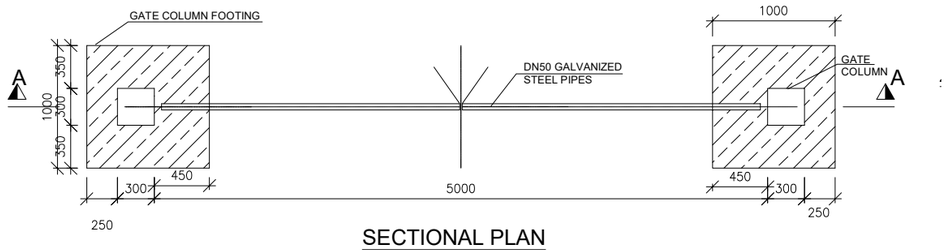

SECTIONAL PLAN
ENTRANCE GATE - 5m WIDE
SCALE 1:50

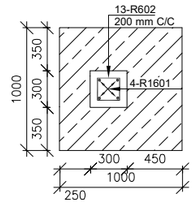

SECTION D-D
SCALE 1:50

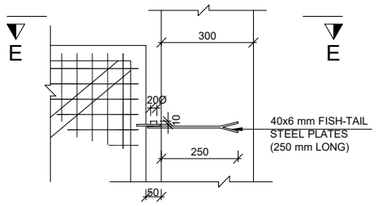

FRONT ELEVATION
SCALE 1:20

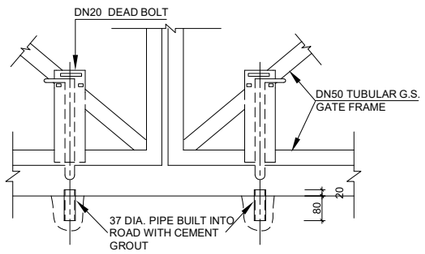

MAIN GATE BOLTING
DETAIL I
SCALE 1:20

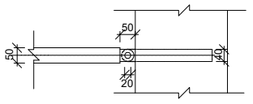

SECTION E-E
SCALE 1:20

GATE HINGES
DETAIL II

NOTES

1. ALL CONCRETE IS CLASS 25/20 UNLESS STATED OTHERWISE.
2. FENCE POSTS SHALL NOT BE MORE THAN 3 m c/c
3. SPECIAL FENCE POSTS WITH STRUTS SHALL BE USED AT ALL CORNERS AND AT DISTANCES NOT MORE THAN 30 m c/c.
4. WHERE CHAIN LINK (TYPE GLC) 180 IS SPECIFIED, THEN USE ONLY THREE LINE WIRES AND THREE ROWS OF BARBED WIRE AT THE TOP.
5. R DENOTES MILD STEEL

   GLC GALVANISED LINK CHAIN

   PCC PRECAST CONCRETE

   DN NOMINAL DIAMETER

   GL GROUND LEVEL
6. ALL DIMENSIONS IN THIS DRAWING ARE INDICATIVE. THE CONTRACTOR HAS TO VERIFY ALL INFORMATION ON THIS DRAWING BEFORE STARTING THE WORKS. ALL UPDATED DRAWINGS ARE TO BE APPROVED BY THE ENGINEER. REGARDING THE UNDERGROUND INFRASTRUCTURE, THE CONTRACTOR HAS THE FULL RESPONSIBILITY TO GET ALL THE NECESSARY INFORMATION AND PERMISSIONS FROM THE CONCERNING COMPANIES.

LEGEND

REINFORCED CONCRETE

MASS CONCRETE

Hardcore

EMERGENCY WORKS FOR INCREASE OF WATER AVAILABILITY IN LIKONI

SHORT TERM TECHNICAL ASSISTANCE
MWACHE PROJECT

Client/Employer:
COAST WATER WORKS DEVELOPMENT AGENCY
P.O BOX 90417, 80100, MOMBASA. KENYA

Consulting Engineer:
GKW Consult GmbH
Augustaanlage 67
68165 Mannheim
GERMANY

Subconsultant:
ISEP
Heri Paradise, Suite 8C
Dennis Pritt Road
P.O. BOX 3271,
00200 - GPO, NAIROBI, KENYA

Revisions:

REV.	DATE	REMARKS

SURVEYED BY:
DESIGNED BY: C.O.
DRAWN BY: F.V.
CHECKED BY: C.O.
APPROVED BY: J.B.

SCALES:
Not to scale

Drawing Title:
STANDARD DRAWINGS AND MINOR WORKS
FENCING AND GATE DETAILS
SHEET 1 OF 2

Date:	Drg. No.	Sheet
08/2019	**1230/K/015/A**	38

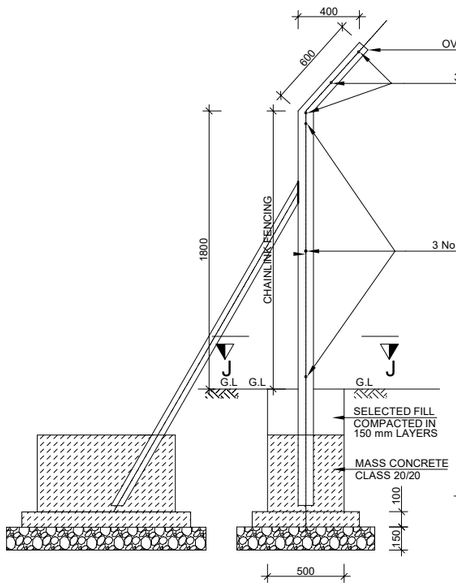

CROSS SECTION DETAIL
FENCING POST
SCALE 1:40

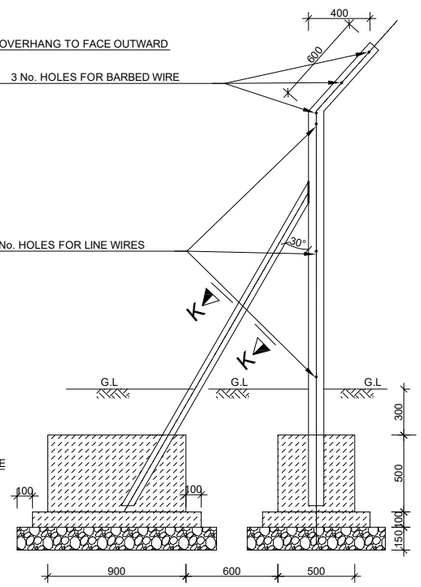

CROSS SECTION DETAIL
STRUTTED CHAINLINK
FENCING POST
SCALE 1:40

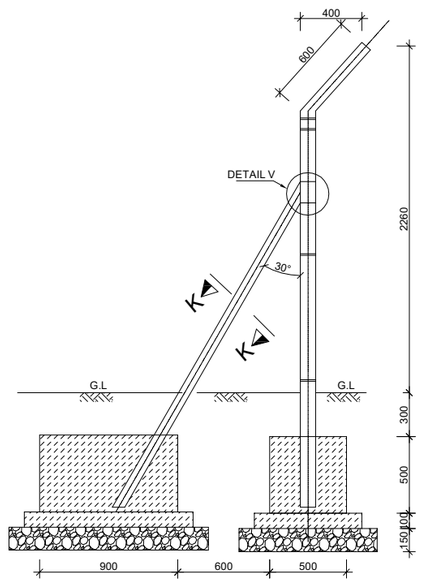

CROSS SECTION DETAIL
STRUTTED CHAINLINK
FENCING POST
SCALE 1:40

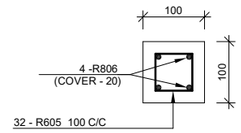

SECTION K-K
SCALE 1:10

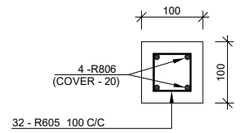

SECTION J-J
SCALE 1:10

NOTES

1. ALL CONCRETE IS CLASS 25/20 UNLESS STATED OTHERWISE.
2. FENCE POSTS SHALL NOT BE MORE THAN 3 m c/c
3. SPECIAL FENCE POSTS WITH STRUTS SHALL BE USED AT ALL CORNERS AND AT DISTANCES NOT MORE THAN 30 m c/c.
4. WHERE CHAIN LINK (TYPE GLC) 180 IS SPECIFIED, THEN USE ONLY THREE LINE WIRES AND THREE ROWS OF BARBED WIRE AT THE TOP.
5. R DENOTES MILD STEEL

   GLC GALVANISED LINK CHAIN

   PCC PRECAST CONCRETE

   DN NOMINAL DIAMETER

   GL GROUND LEVEL
6. ALL DIMENSIONS IN THIS DRAWING ARE INDICATIVE. THE CONTRACTOR HAS TO VERIFY ALL INFORMATION ON THIS DRAWING BEFORE STARTING THE WORKS. ALL UPDATED DRAWINGS ARE TO BE APPROVED BY THE ENGINEER. REGARDING THE UNDERGROUND INFRASTRUCTURE, THE CONTRACTOR HAS THE FULL RESPONSIBILITY TO GET ALL THE NECESSARY INFORMATION AND PERMISSIONS FROM THE CONCERNING COMPANIES.

LEGEND

REINFORCED CONCRETE

MASS CONCRETE

Hardcore

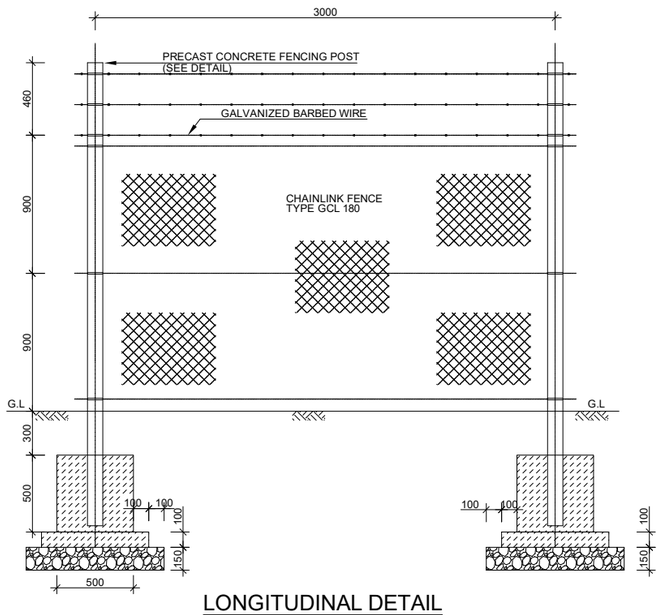

LONGITUDINAL DETAIL
SCALE 1:40

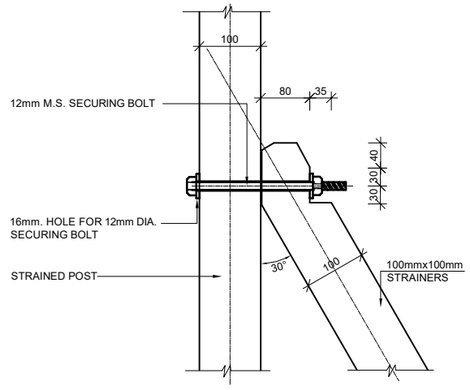

DETAIL V
SCALE 1:10

EMERGENCY WORKS FOR INCREASE OF WATER AVAILABILITY IN LIKONI

SHORT TERM TECHNICAL ASSISTANCE
MWACHE PROJECT

Client/Employer:
COAST WATER WORKS DEVELOPMENT AGENCY
P.O BOX 90417, 80100, MOMBASA. KENYA

Consulting Engineer:
GKW Consult GmbH
Augustaanlage 67
68165 Mannheim
GERMANY

Subconsultant:
ISEP
Heri Paradise, Suite 8C
Dennis Pritt Road
P.O. BOX 3271,
00200 - GPO, NAIROBI, KENYA

Revisions:		
REV.	DATE	REMARKS

SURVEYED BY:
DESIGNED BY: C.O.
DRAWN BY: F.V.
CHECKED BY: C.O.
APPROVED BY: J.B.

SCALES:
Not to scale

Drawing Title:
STANDARD DRAWINGS AND MINOR WORKS
FENCING AND GATE DETAILS (SHEET 2 OF 2)

Date:	Drg. No.	Sheet
08/2019	**1230/K/016/A**	39

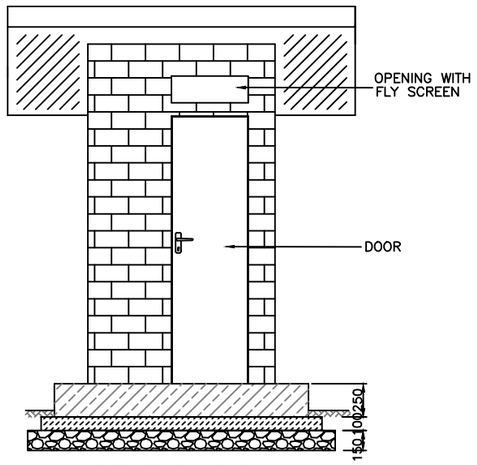

SIDE ELEVATION

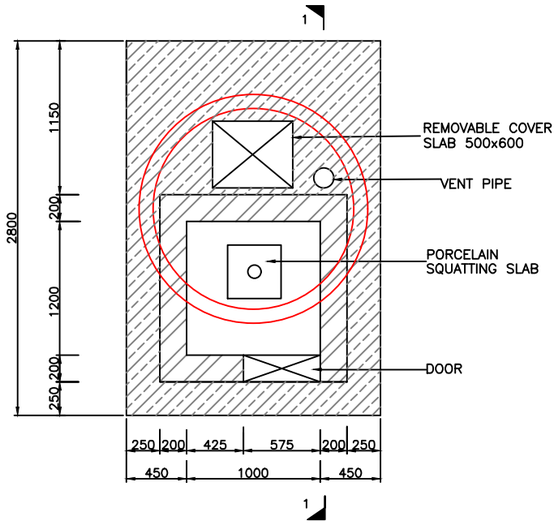

FLOOR PLAN

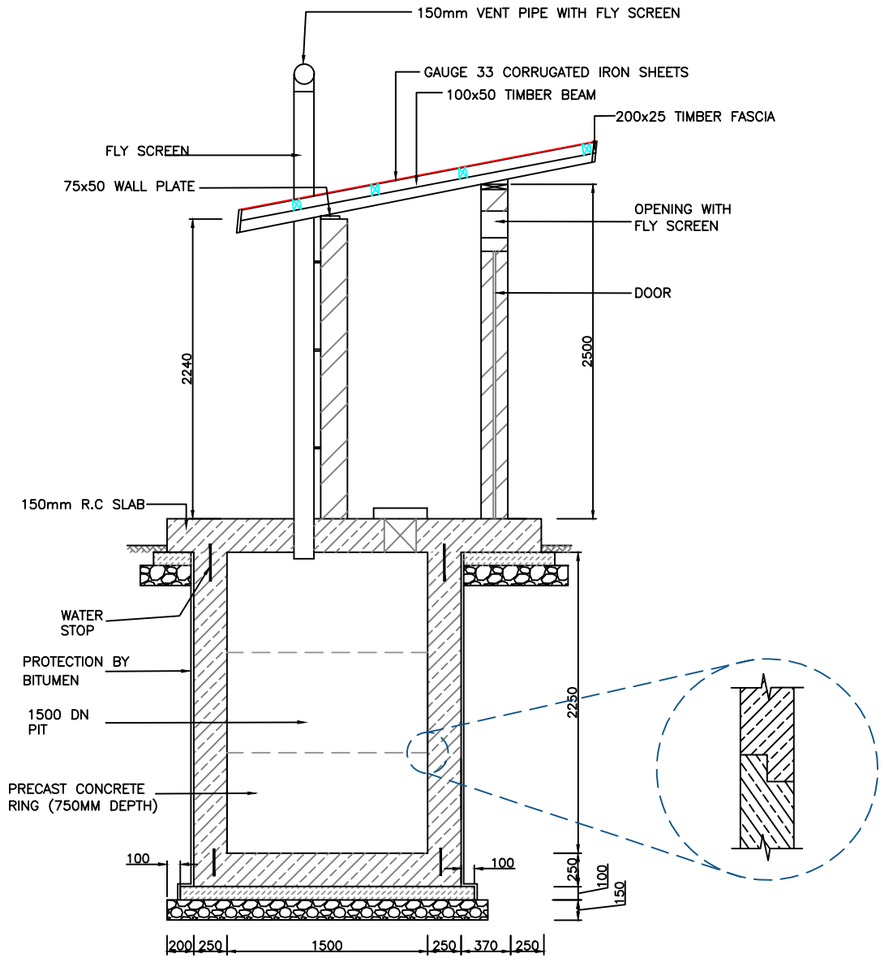

SECTION 1–1

Notes

1. All dimensions are in millimeter unless otherwise stated.
2. Only figured dimensions to be taken from this drawing
3. All dimensions in this drawing are indicative. The Contractor has to verify all information on this drawing before starting the works. All updated drawings are to be approved by the Engineer. Regarding the underground infrastructure, the Contractor has the full responsibility to get all necessary information and permissions from the concerning company.

LEGEND

- REINFORCED CONCRETE
- MASS CONCRETE
- MASONRY
- HARDCORE

EMERGENCY WORKS FOR INCREASE OF WATER AVAILABILITY IN LIKONI

SHORT TERM TECHNICAL ASSISTANCE
MWACHE PROJECT

Client/Employer:
COAST WATER WORKS DEVELOPMENT AGENCY
P.O BOX 90417, 80100, MOMBASA. KENYA

Consulting Engineer:
GKW Consult GmbH
Augustaanlage 67
68165 Mannheim
GERMANY

Subconsultant:
ISEP
Heri Paradise, Suite 8C
Dennis Pritt Road
P.O. BOX 3271,
00200 - GPO, NAIROBI, KENYA

Revisions:

REV.	DATE	REMARKS

SURVEYED BY:
DESIGNED BY: C.O.
DRAWN BY: F.V.
CHECKED BY: C.O.
APPROVED BY: J.B.

SCALES:
Not to scale

Drawing Title:
STANDARD DRAWINGS AND MINOR WORKS
Ventilated Improved Pit Latrine (VIP)

Date:	Drg. No.	Sheet
09/2019	1230/K/017/A	40